DSN Monitor and Control System Mark III-82

G. L. Spradlin
TDA Engineering Office

A description of the DSN Monitor and Control System, Mark III-82 is presented. The major implementations required to evolve from the Mark III-80 to the Mark III-82 configuration are identified.

I. Introduction

The DSN Monitor and Control System, Mark III-82, is a multimission system utilized by the DSN to support Pioneers 6-11, Helios, Viking, Pioneer Venus, and Voyager missions. Figure 1 provides a block diagram of the DSN Monitor and Control System, Mark III-82 configuration.

Since 1980, implementation of equipment and software changes within the DSN facilities has resulted in enhanced capability within the DSN Monitor and Control System. The affected facilities are the Deep Space Stations and the Network Operations Control Center.

At the Deep Space Stations (DSS) a TDS Stand-Alone Host Processor has been implemented. Included are software ("host" software) changes which provide downline loading to the Stand-Alone Host Processor from a disc unit of any idle data system computer.

In the NOCC, changes have been made to functionally combine the elements of the NOCC Monitor and Control Subsystem (NMC) with the Display Subsystem that in effect redefines the NMC to include the man/machine interface for network operations. Some software and hardware modifications have also been accomplished.

II. Deep Space Station

As part of the DSN Monitor and Control System, the DSS Monitor and Control Subsystem (DMC) provides two primary functions: (1) The DMC provides the central control monitor capability for the DSS, and (2) the DMC receives control data from and furnishes monitor data to the NOCC for network control and monitor purposes.

There are four major assemblies of the DMC that accomplish the above functions. The four major elements are:

(1) Digital Instrumentation Subsystem (DIS).

(2) Stand-Alone Host Processor.

(3) Station Monitor and Control Console.

(4) Data System Terminal.

A. Digital Instrumentation Subsystem (DIS)

The DIS, (an XDS 920 computer) is utilized as a central collection point for station monitor data and for interfacing with the NOCC. For collecting station monitor data, the DIS has interfaces with all of the station subsystems. The station monitor data are accumulated by the DIS and displayed to the station operator located at the Station Monitor and Control

Console. Additionally, a subset of this station monitor data is sent to the NOCC for central monitoring purposes. New implementation within the DIS was limited to replacement of obsolete and hard-to-repair line printers. These printers are used to provide control data to the stations (e.g., predictions, sequence of events, and schedule data).

B. Stand-Alone Host Processor Assembly (SHP)

The SHP, which consists mainly of the Modcomp 7810 classic computer, has been installed in the DIS Monitor Interface Assembly (DMI) cabinet at all Deep Space Stations for the Mark III-82 configuration. Previously, the host software operated concurrently with the communications program in the Communications Monitor and Formatter Assembly (CMF). The SHP was implemented to remove constraints which arose from the use of the CMF to support data recalls and system performance tests. The SHP provides the interface for centralized operation of DSS data system computers.

The operational program is downline loaded using a disc drive of an idle data system computer (either the Command Processor Assembly, Metric Data Assembly, Communications Monitor and Formatter Assembly or Telemetry Processor Assembly). The SHP is interfaced to the data system computers via a Star Switch Controller (SSC) and operates in an unattended manner in conjunction with the Data System Terminal.

C. Station Monitor and Control Console (SMC IIA, SMC IIB)

The SMC IIA and SMC IIB were implemented for the purpose of providing a central monitor and control operator's position for some of the noncomputerized subsystems. Two different configurations, designated SMC IIA for the 64 m DSS and SMC IIB for all others, were developed for the DSN.

D. Data System Terminal Assembly (DST)

The DST is used as a central DSS input-output device for computers in the Command, Telemetry, Tracking, and Radio Science Subsystems, and for the Communications Monitor Formatter at the DSS. It consists of four elements: two keyboard-CRTs, a hardcopy printer, and "host" software capability. The keyboard-CRTs and printers interface with the host software, and the host software then interfaces with all of the data system computers via the Star Switch Controller. In this manner, the data system computers can be centrally controlled and monitored. The DST and the Station Monitor and Control console are collocated within the DSS control room and form a centralized operator position for monitor and control.

III. Network Operations Control Center (NOCC)

The NOCC Monitor and Control Subsystem (NMC) was redefined to include all elements of what was formerly called the Display Subsystem. These elements, consisting of Digital Display Processor (DDP, a Modcomp II computer) and the Video Assembly Processor (VAP, a Modcomp II computer), are now referred to as the Display Group, and are functionally part of the NMC. In addition to the elements mentioned above, the NMC includes a Real-Time Monitor (also a Modcomp II computer with peripheral I/O devices).

The NMCs' primary functions are to provide overall network status, configuration, and performance visibility to the Network Operations Control Team. It provides the man/machine interface for displays and for operator controls. Recent modifications to the NMC have been in the area of the Display Group and include additional operational control terminals and display printers and software modifications to eliminate coupling between the Display Group and other NOCC Subsystems that has historically resulted in unnecessary complexity in software change implementation.

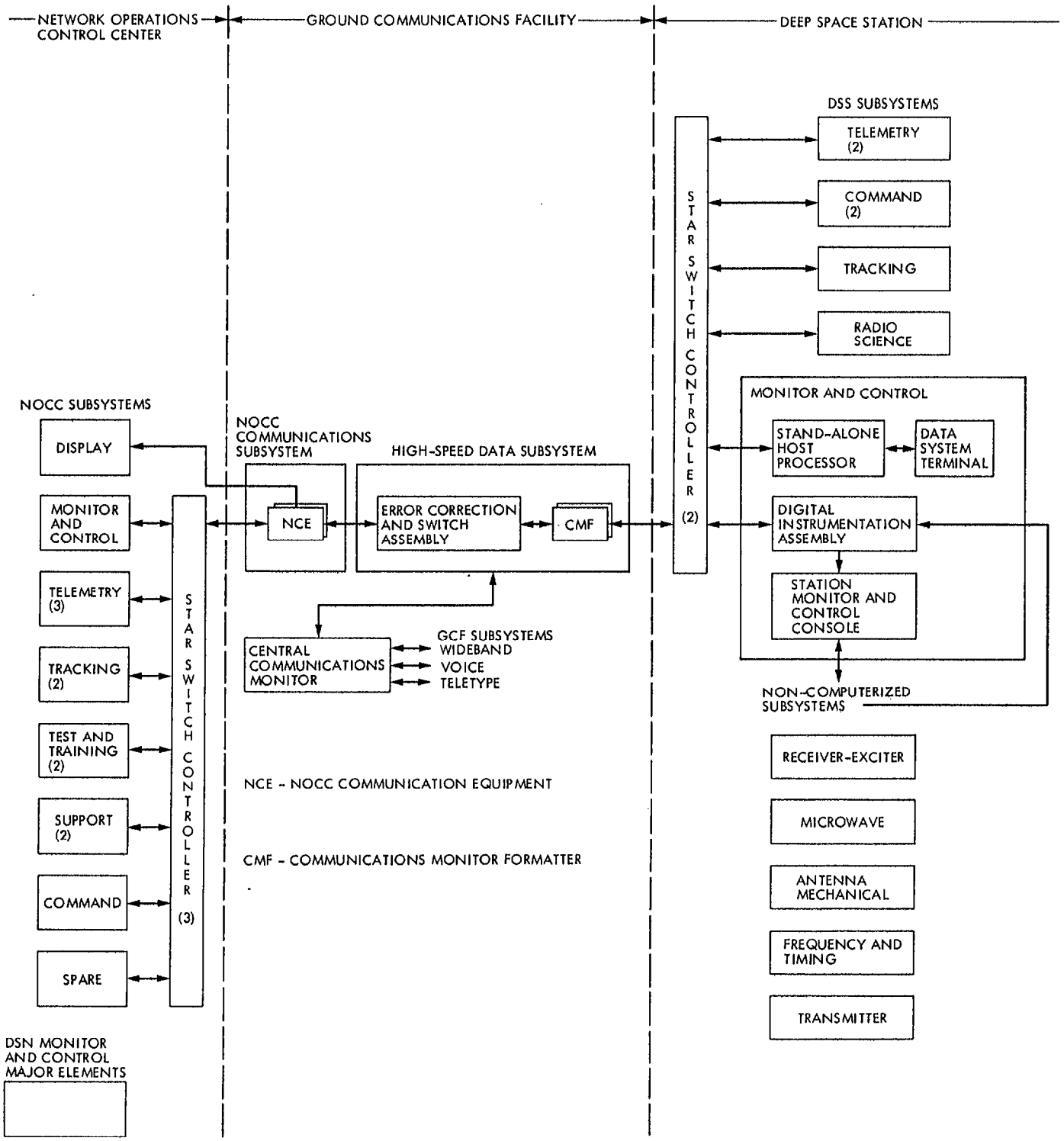

Fig. 1. DSN monitor and control system, Mark III-82