The Design and Implementation of the Technical Facilities Controller (TFC) for the Goldstone Deep Space Communications Complex

D. A. Killian and F. J. Menninger
Ground Antenna and Facilities Engineering Section

T. Gorman and P. Glenn
TDA Mission Support and DSN Operations

The Technical Facilities Controller is a microprocessor-based energy management system that is to be implemented in the Deep Space Network facilities. This system is used in conjunction with facilities equipment at each of the complexes in the operation and maintenance of air-conditioning equipment, power generation equipment, power distribution equipment, and other primary facilities equipment. The implementation of the Technical Facilities Controller has been completed at the Goldstone Deep Space Communications Complex and is now operational. This article describes the installation completed at the Goldstone Complex and evaluates the utilization of the Technical Facilities Controller. The findings will be used in the decision to implement a similar system at the overseas complexes at Canberra, Australia, and Madrid, Spain.

I. Background

The Deep Space Network (DSN) is operated and managed for NASA by JPL and is composed of three Deep Space Communications Complexes (DSCCs) located at Goldstone, California; Madrid, Spain; and Canberra, Australia. The DSN serves as the primary facility for communication with deep space missions such as Voyager 1 and 2, the Pioneer series, and the soon to be launched Galileo spacecraft.

The Goldstone Complex consists of four Deep Space Stations (DSSs) extending over a sixteen mile stretch of road in the Mojave Desert. It includes 34-m and 70-m class antennas and about one hundred antenna support buildings ranging in function from control room buildings and generator power plant buildings to administrative buildings that support approximately 200 employees.

The Technical Facilities Controller (TFC) was initially conceived circa 1975 as a Utility Control System (UCS) when a distributed process controller was developed to monitor and control facilities equipment for energy management. The facilities equipment includes Heating, Ventilating, and Air Conditioning (HVAC), lighting, power generation, power distribution, and site protection equipment.

The initial prototype system was demonstrated at the Venus station (DSS-13) at Goldstone using a scaled-down version of the TFC called "Pathfinder." Pathfinder was envisioned to

monitor and control room temperatures and power. Therefore, it would control energy loads such as HVAC equipment and lighting. The results of this prototype showed that a distributed process controller should be implemented as a useful facilities energy management tool. The energy management features were augmented by many additional advantages such as improving facility performance, reporting capabilities, and instrumentation monitoring.

II. Functional Requirements

The functional requirements for the TFC centered on many operational needs for upgrading facility performance in unattended operation, safety, maintainability, and availability. The following is a fundamental list of functional requirements for the TFC:

(1) The TFC shall be capable of receiving input data from different sources such as digital sensors (switch closures), analog sensors (4–20 mA signal), real time clock information, and electrical power meters (with pulsers).

(2) The TFC shall be capable of sending digital on/off load control commands to any TFC connected equipment.

(3) The TFC shall be capable of accepting input sensor data and sending output load commands at multiple locations distributed throughout the Complex (i.e., serve as a distributed process control and monitor).

(4) The TFC shall be capable of handling single "event control." An event control is defined as a specific set of input sensor data used to trigger a command to set a specific output load configuration.

(5) The TFC shall be capable of executing energy management control of specific loads. This control consists of peak demand load shedding during periods of high and costly energy usage, and exercise time-of-day control.

(6) The TFC shall be capable of archiving sensor data and operational activity reports (on a hard disk or magnetic tape) for future access and analysis by engineers and management.

(7) The TFC shall be capable of collecting sensor data, processing it, and generating Trend Reports for future access and analysis.

(8) The TFC shall be capable of reporting alarms (i.e., fire, power outage, equipment malfunctions, equipment exceeding specific operational ranges, etc.) both at the central point (via printer and terminal) and at each Deep Space Station (via printer and terminal).

(9) The TFC shall be capable of sending critical alarm status reports to a secondary destination if the primary destination is not available.

(10) The TFC shall be capable of self-diagnostics and testing to check for hardware failures and communications link breakdowns. In the event of equipment failure, the TFC will report such to the operator.

(11) The TFC shall be capable of operating in a fail-safe configuration. This feature will allow the users to request controlled loads to be set into a specific configuration (on or off) when TFC equipment fails.

The detailed design and fabrication for the TFC at Goldstone was bid by approximately eight different commercial manufacturers. The contract was awarded to AT&T Guilford Center in Greensboro, North Carolina, which satisfied all of the requirements using a microprocessor-based commercial off-the-shelf system called Affirm III.

III. System Architecture

The TFC system consists of four basic building blocks that can be configured to match specific user needs. The four blocks are shown in Fig. 1 and are described in the following paragraphs:

A. Central Control Unit (CCU)

B. Local Control Unit (LCU)

C. Sensor Control and Network Node (SCANN)

D. Terminals and Printers

A. Central Control Unit (CCU)

The CCU, shown in Fig. 2, is an AT&T Applications Processor with an 8086 CPU, 512k of memory, and a 40 Mbyte hard disk. The current configuration of the CCU allows for communication over 12 Electronic Industries Association (EIA) standard RS232 ports and 18 Standard Serial Interface (SSI) standard RS232 ports. The EIA ports run at 1200 bps and are used to communicate over standard phone lines to the LCU's remote printers and remote terminals. The SSI ports operate at 19.2 kbps and are used as the local primary interface to the System Administrator in the form of a System Printer and Terminal and an Alarm Printer and Terminal. The CCU operates using UNIX 3.0 with the applications program (Automated Building Management [ABM]) developed by Bell Laboratories, New Jersey [1]. This package serves as the primary user interface and database management area. The ABM package is a menu driven system for editing all system databases and providing energy management features. These data-

bases include installation information, sensor descriptions, event descriptions, energy management data, and controlled load definitions. All information is centralized at the CCU for access by the System Administrator. However, it does not execute any commands or make decisions on energy management. These energy management tasks are left to the SCANNs and LCUs. After all databases are edited, they are downloaded to the LCUs and SCANNs for ABM operations. With this method of operation, the user can manage system databases and historical data without interrupting ABM operations.

B. Local Control Unit (LCU)

The LCU, as shown in Fig. 3, serves as the workhorse of the system architecture. All decision-making logic resides at the LCU and is communicated to SCANNs as required. Once database information is downloaded from the CCU it is the responsibility of the LCU to provide control and monitor information at the SCANNs under its direct command. Likewise, it is the responsibility of the LCU to report sensor status changes and diagnostic information back to the CCU at regular intervals. The LCU communicates with the CCU over two serial links: the Alarm Link and the Interactive Link. The Alarm Link is dedicated to reporting critical alarm information back to the CCU. The Interactive Link is provided for all non-critical communication with the CCU. This communication includes database downloading and diagnostic information reporting. At a relatively quiet time during ABM operation (for example, 2:00 AM) the CCU reloads the LCU with databases and the LCU in turn transmits archive data and activity reports back to the CCU for future access by the user. A second function of the LCU is to provide locations to tie binary sensors, and load controls directly into the LCU, without requiring a SCANN. Each LCU is capable of directly scanning 256 binary sensors, directly controlling 96 loads, and communicating with up to 8 SCANN units.

C. Sensor Control and Network Node (SCANN)

The SCANN, as shown in Fig. 4, is the primary front end of the system architecture. It consists of a power supply, a maintenance panel, and a card cage that can be configured for various applications. The card cage has 9 slots that can handle CPU, Communications, Binary Input, Binary Output, Analog Input, and Power Meter Input circuit cards. The SCANN can be configured as required with any combination of circuit cards (CPU and communications cards are required). These SCANNs send status messages to the Local Control Unit (LCU) whenever a change in state of a sensor is detected. If no change of state is detected, the LCU polls the SCANN for a status message at one minute intervals. These SCANNs can be located as far as 300 m from an LCU without requiring a modem or other line conditioning.

D. Terminals and Printers

The printers and terminals are the primary user interface. There are basically two types of interfaces: EIA and SSI. The EIA terminals and printers serve as remote communications ports to locations requiring a modem to communicate with the CCU. These printers and terminals serve a dual purpose: to provide remote access to the CCU and to allow direct communication with the local LCU and its associated SCANNs. In a normal configuration, these printers and terminals interface with the CCU for the user to request reports and system status. If the CCU fails or "goes down," the system can be reconfigured for the LCUs to send critical information to the local printer and terminal instead of the CCU. This is called the "Degrade Mode" of operation that serves as a suitable backup when equipment fails or communications links are broken.

Printers and terminals of the second type, SSIs, are in direct interface to the CCU. They reside within 1500 m of the CCU and can communicate over standard phone lines. The Alarm Terminal serves as the primary list device for all critical system sensors and alarm points. The Alarm Printer serves as the primary hardcopy listing device for system alarm activity. The System Administrator's Terminal is the primary location for database editing and requests for reports. The System Printer is a high speed printer that acts as the primary list device for the generation of reports requested by any user of the system.

The four TFC building blocks described above make the selected TFC system flexible, expandable, and readily configured into JPL's specific applications.

IV. System Description

The current TFC configuration is shown in Fig. 5. This configuration consists of 26 SCANNs attached to 4 LCUs communicating with one CCU. Also interfacing with the CCU are one System Administrator's Terminal, one Alarm Terminal, one System Printer, one Alarm Printer, a Remote Printer and Terminal at the Venus station (DSS 13), and a Remote Printer and Terminal at the Mars station (DSS 14). One LCU is located at each station with two located at the Mars station because of its primary activity. The SCANNs are distributed throughout the Complex at all locations where facilities data is currently required or will be required in the future. The Alarm Terminal is currently located at the Goldstone Communications Facility (GCF-10), which is the only facility that is attended 24 hours a day and 7 days a week. At this terminal, all Complex alarms are reported and acknowledged, and appropriate action taken. The Alarm Printer is located at the facility's Duty Electrician Shop to enable the resident electrician to watch the status of critical alarms. The System Printer and System Administrator's Terminals are located in the System Administrator's

office. From this location, tight control is maintained on all database editing and usage of the system. Additionally, the TFC is closely monitored for erroneous activity, hardware failures, and software difficulties. An extensive error log and activity report allows access to this information The current configuration, therefore, is easily interfaced and readily accessible to all users who require system data.

Since the central core of TFC equipment was installed in August 1986, many different subsystems have been interfaced to the TFC. Table 1 shows the current instrumentation that interfaces to the TFC.

The primary use of the TFC is in the monitoring of critical facilities and operational equipment. At the present time, the TFC has little control activity. Most equipment at the Complex could not be controlled on an energy conservation basis due to the continuous demand for equipment usage.

V. Performance Analysis

A thorough analysis was completed on the functional performance of the TFC. This analysis consisted of a three phase collection of operational data.

The first phase of data collection consisted of developing a complete list of historical activity on the system over a period of one and one-half months between July 16, 1987, and September 1, 1987. The activity report consisted of alarm reports, analog sensor trend data, and system diagnostic activities. This data was tabulated and cross-checked with the log books from the Complex Operators. The log books recorded the day and time of the TFC activity, the action executed as a result of the activity, and the solution to the problem that caused the TFC alarm. This information is useful in evaluating the utilization of the TFC as a facilities controller device. The second level of data collection consisted of interviewing the Complex Operators, the System Administrator, and facilities personnel as to their suggestions and recommendations on the utilization of the system. This information addressed aspects of the TFC that include operability, flexibility, and design suggestions in order to improve the system utilization.

The third level of data collection consisted of inspecting a 14 month interval of system error logs. This gave an accurate measure of the reliability and availability of the system in its current configuration.

VI. Analysis Results

The first phase of evaluation, the activity report and log, concluded with the following results about the TFC:

(1) Ninety-one TFC alarms were false due to people working on the system in alarm.

(2) Fifty-one TFC alarms were serious alarms that required immediate response by maintenance technicians.

(3) Eighty-two TFC alarms were "status messages" to provide useful information to facilities personnel.

As a subset of this group, there were 126 alarms due to faulty equipment generating excessive alarms. The equipment often reported error conditions more than one time.

It is noted that 41 percent of the alarms were due to people working on the equipment in alarm. This is one function of the TFC that the facilities personnel found very useful. The TFC provides a means to insure that technicians do not bring down a critical piece of equipment at an improper time. There were multiple situations during the 1.5 month evaluation where technicians were executing preventive maintenance not knowing that they were jeopardizing the proper operation of mission critical equipment. The TFC is useful in predicting these problems before they cause an operational failure.

The second phase of evaluation, personnel interviews, resulted in the following statement: The TFC is a useful facilities tool in the maintenance and troubleshooting of facilities and operational equipment. The data collection capability has been found to be useful in fine-tuning HVAC controllers. The capability of checking the status of a particular system from a remote location has been acknowledged as a useful feature. The ABM software package was found to be easy to operate with its menu driven screens. The System Administrator found that it was a simple process to add monitor instrumentation to any node of the system.

Suggested improvements to the system were provided by operations personnel as follows:

(1) Include color graphics screen design tools to improve the operability of the monitoring capabilities.

(2) Provide a backup power source for the SCANNs in case of commercial power outage.

(3) Improve local diagnostic capabilities at the LCUs.

(4) Provide screen graphing capabilities for trend reports.

The third phase of evaluation showed that the TFC, once installed and operational, does meet the availability requirements set forth in the Functional Requirements Document

(FRD 824-4).[1] The estimated availability of the TFC over the 15 month evaluation period was shown to be 99.9699 percent. The implementation phase was challenging, and the CCU, as initially received from AT&T, was unreliable. However, since the problem was traced to a faulty hard disk and the element replaced, the system has been very reliable with few noticeable hindrances.

One important feature of the TFC is its extensive remote diagnostics capabilities. All operations at the Complex can be executed from a remote location on dial-up phone lines. This allows the Cognizant Design Engineer to assist in troubleshooting and survey activity on the system.

[1] *Mark IVA Technical Facilities Subsystem (1982 to 1986)*, JPL DSCC Subsystem Functional Requirements Document 824-4, Rev. C, Jet Propulsion Laboratory, Pasadena, California, April 1, 1984.

VII. Summary

A Technical Facilities Controller was designed and installed at the Goldstone Deep Space Communications Complex for the monitoring and controlling of facilities equipment. In the 15 month post-installation period, the TFC shows its many advantages in the operation and maintenance of facilities equipment at the Complex. As a result, it is recommended that a TFC be implemented at the overseas DSN Complexes at Canberra and Madrid.

Acknowledgments

The writers would like to acknowledge the guidance and support of the following individuals: Robert Evans, David Kuma, and Ron Casperson of the Telecommunications and Data Acquisition Program Office; Robert White, Glen Kroll, Rollin Reynolds, and Fikry Lansing of the Ground Antenna and Facilities Engineering Section; and Billy Walker and his staff of DSN Operations for their assistance throughout the design and implementation of this project.

References

[1] *Automated Building Management (ABM) System Description*, JPL TM23910, AT&T, Issue 1, August 1983.

Table 1. Current instrumentation allocation

Subsystem	Digital sensor	Analog sensor	Load control	Power meter
Fire detection	87	0	0	0
HVAC	116	18	2	0
Water distribution	0	8	0	0
Power	12	0	2	4
Critical operational alarms	20	0	1	0
TFC self-diagnostics	32	0	2	0
Totals	267	26	7	4

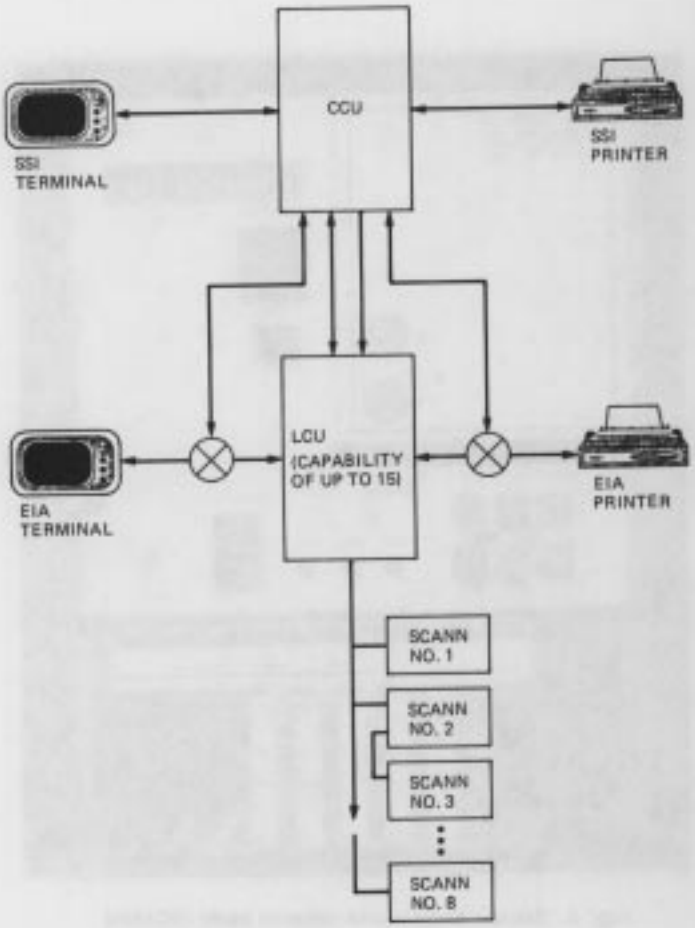

Fig. 1. TFC major elements

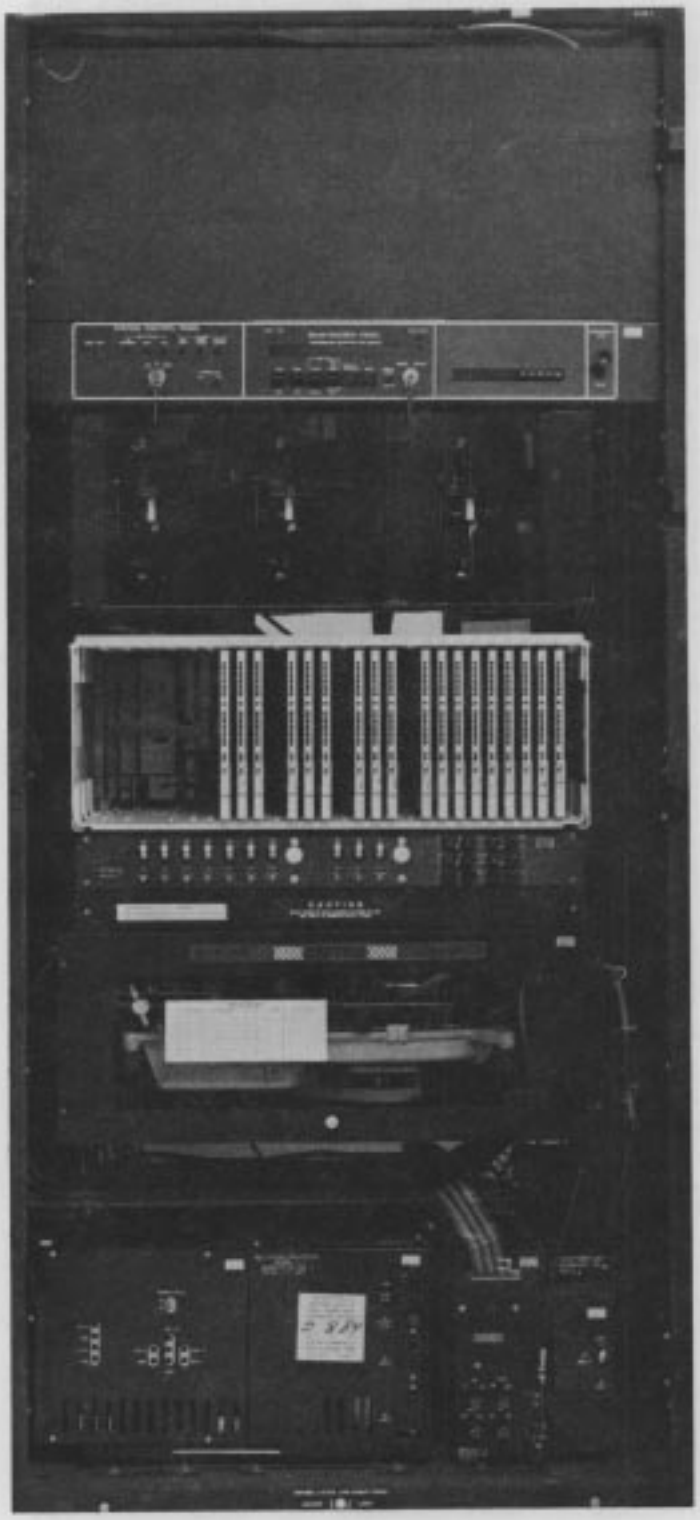

Fig. 2. Central control unit (CCU)

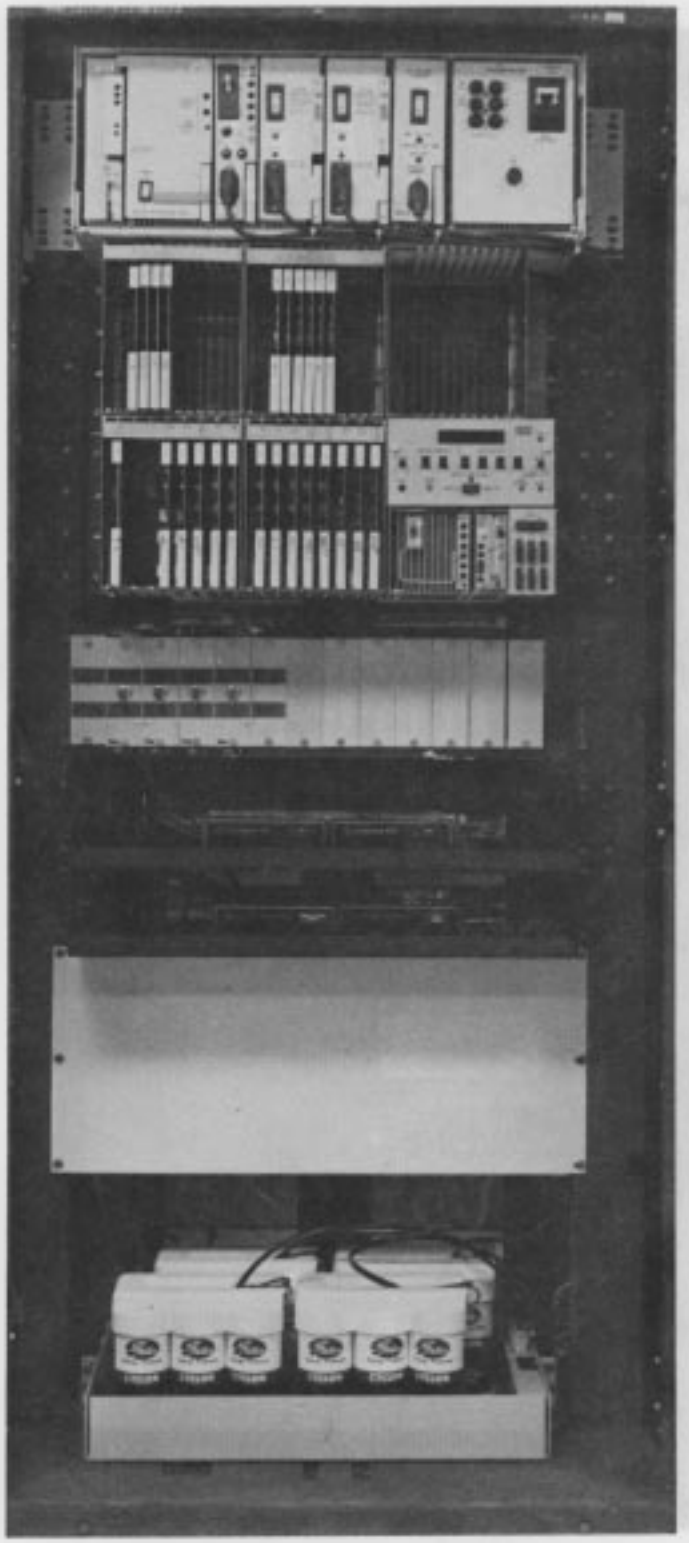

Fig. 3. Local control unit (LCU)

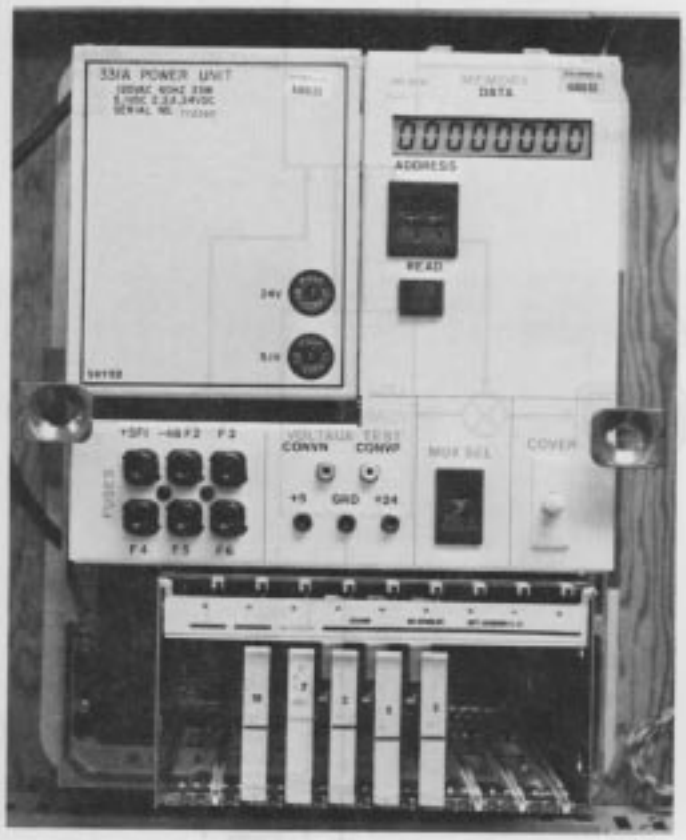

Fig. 4. Sensor control and network node (SCANN)

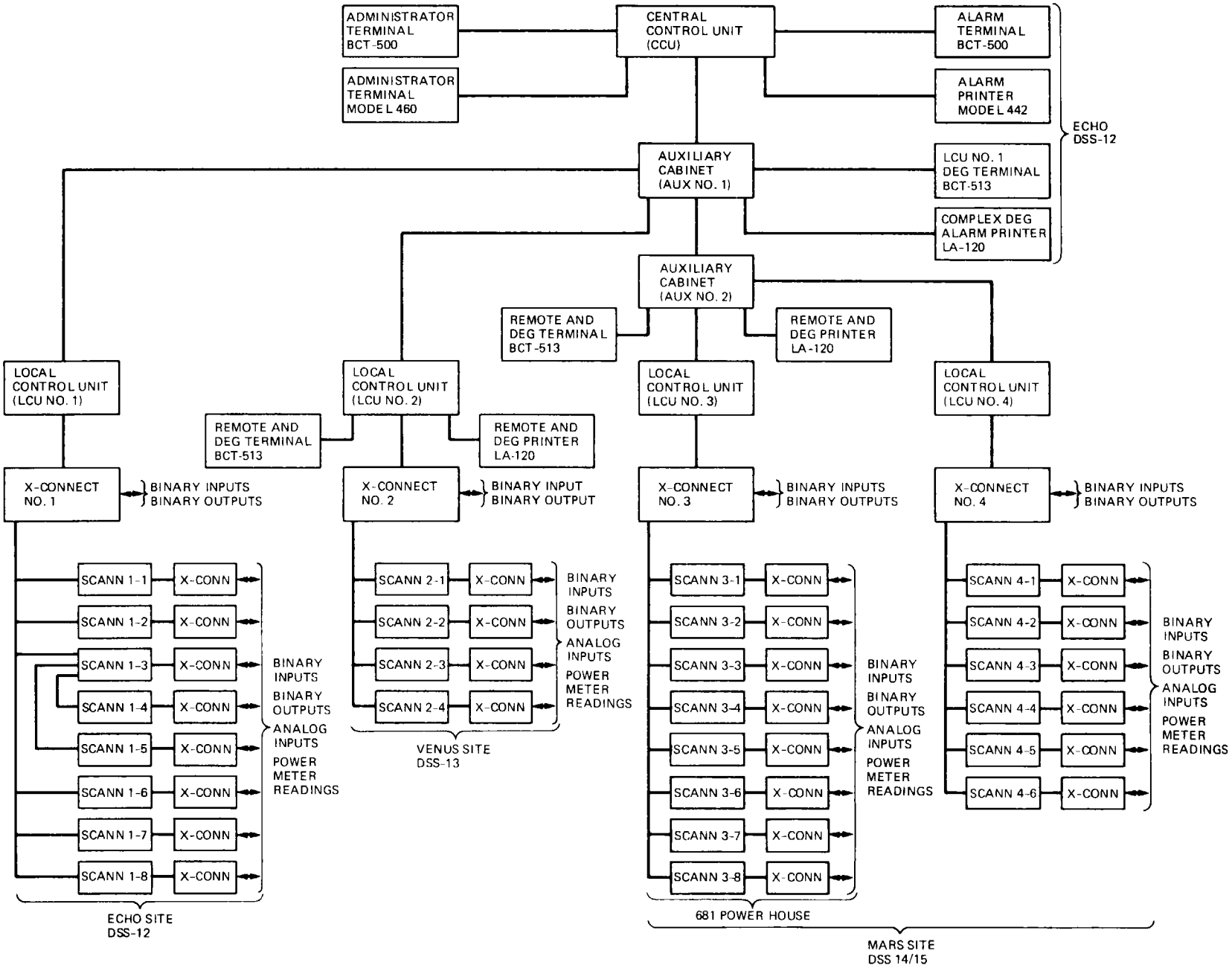

Fig. 5. Current configuration