International Solar Polar Mission

R. B. Miller
TDA Mission Support Office

The key configurations and characteristics of the two International Solar Polar Mission spacecraft are described.

I. Introduction

The International Solar Polar Mission (ISPM) is a joint activity of the European Space Agency (ESA) and the National Aeronautics and Space Administration (NASA). The NASA portion of the Project is under the Solar Terrestrial Program of the Office of Space Science. The NASA Project management is at JPL. The ESA portion of the mission is under the Scientific Program Office of the Scientific and Meteorological Programs Directorate at ESA Headquarters located in Paris, France. The ESA Project management is at the European Space Technology Center (ESTEC) located at Noordwÿk, The Netherlands. ESA will be providing one of the two spacecraft for the mission, about half of the science instruments on both spacecraft, and the spacecraft-dependent mission operations personnel and software. NASA will provide a spacecraft, science instruments on both spacecraft, the RTGs, the launch vehicles, the Mission Operations Control Center for both missions, and the TDA support. The NASA Project Manager at JPL has overall responsibility for the NASA-provided support of the mission.

The ESA spacecraft will be a European industry product using the STAR Consortium of firms, with the systems contract under the leadership of Dornier System GmbH, located near Friedrichshafen, Germany. The NASA spacecraft will also be an industry product, using a systems contract with the TRW Space Systems Group located at Redondo Beach, California.

II. Mission Description

The ISPM project uses a NASA spacecraft and an ESA spacecraft. The two spacecraft are launched from Cape Canaveral, Florida, using separate shuttles, each carrying a three-stage Inertial Upper Stage (IUS). Early this year the design of the third stage of the IUS was changed from spin-stabilized to 3-axis. The launch opportunity opens on 27 March and closes 5 May 1985. The shuttle ascends from the Cape to a 150-nautical-mile-altitude circular parking orbit. After spacecraft checkout, the IUS with its NASA or ESA payload is deployed. At the proper time, the IUS ignition sequence delivers the spacecraft on an interplanetary trajectory to Jupiter.

The NASA and ESA spacecraft travel nearly in the ecliptic to Jupiter. The spacecraft will be targeted to utilize the Jovian gravitational field to deflect both spacecraft out of the ecliptic, one north and the other south. After Jupiter flyby, both spacecraft will travel in heliocentric, out-of-ecliptic orbits with high heliographic inclination, with a simultaneous pass encompassing one solar sidereal revolution at heliographic

latitude above |70|.* At maximum latitude, the distance from the Sun will be approximately 2 AU. After the polar pass, the two spacecraft will go through perihelion at about 1 AU and then enter a second high latitude phase with the spacecraft at opposite hemispheres. The mission terminates in late 1989 at the end of the second polar pass when the two spacecraft again cross below |70| degrees heliographic latitude.

The primary mission objectives of the ISPM are to investigate, as a function of solar latitude, the properties of the solar corona, the solar wind, the sun/wind interface, the heliospheric magnetic field, solar and nonsolar cosmic rays, and the interstellar/interplanetary neutral gas and dust. In addition, instrumentation is included to detect the mysterious gamma ray bursts; it is hoped to pinpoint the sources of these bursts by using triangulation from each spacecraft and the Earth.

The secondary mission objectives include: (1) interplanetary physics investigations during the Earth-to-Jupiter phase when the separation of the two spacecraft will be approximately 0.01 AU, and (2) measurements of the Jovian magnetosphere during the Jupiter flyby phase.

III. Spacecraft Description

A. Spacecraft Characteristics

The ESA spacecraft, shown in Fig. 1, is a Radioisotope Thermoelectric Generator (RTG)-powered, spin-stabilized vehicle. The centrally located equipment compartment accommodates both engineering and science instrument equipment and supports a deployable 5.5-meter instrument boom, a deployable 72-meter dipole antenna, and a deployable 8-meter axial monopole antenna. Only a portion of the 72-meter antenna is pictured in Fig. 1. Propulsion is provided by two groups of thrusters and a single spin-centered propellant tank. The spacecraft is sized to fit within a 4.2-meter-diameter STS launch envelope with a mass on the order of 400 kg.

The NASA spacecraft, shown in Fig. 2, is also an RTG-powered, spin-stabilized vehicle with a centrally located engineering equipment compartment, which supports a deployable 13-meter instrument boom and a deployable 100-meter dipole antenna. Propulsion is provided by two groups of thrusters; telecommunications equipment includes a 2-meter high-gain antenna, which is offset from the spin axis to accommodate the despun platform. A separate science equipment compartment accommodates instrument mounting. The spacecraft is sized to fit within a 4.2-meter-diameter STS launch envelope with a mass of approximately 500 kg. The dominant physical difference between the ESA and NASA spacecraft is the despun CXX (white light, X-ray coronagraph) telescope located on the spin axis of the latter.

B. Telecommunications

The prime communication link for both spacecraft will be via a parabolic antenna parallel to the spin axis. Precession maneuvers will be periodically performed to maintain Earth pointing. X-band downlink will be the prime telemetry source with S-band used for navigation purposes and to provide a TDRSS compatible link in the near-Earth phase. The S-band and X-band downlinks may be noncoherent or coherently derived from the received uplink signal independently. The most common mode expected during the mission would be a split mode with S coherent providing radio metric data, and X noncoherent to avoid telemetry degradation due to turnaround loss. Both spacecraft can be commanded in advance into a state where X- and/or S-band downlinks will automatically switch to coherent upon spacecraft receiver lock or into a state where a command is required to go coherent. Addition of an experimental X-band receive capability on the NASA spacecraft was still undecided at the time of writing.

Pertinent spacecraft telecommunication parameters are listed in Table 1. Both spacecraft will use Viterbi compatible encoding on the telemetry with the NASA spacecraft adding a Reed-Solomon outer code. Both spacecraft will utilize PCM commanding, the NASA spacecraft consistent with NASA Planetary Command Standards and ESA consistent with the ESA Telecommand Standards. The ESA Telecommand Standards are compatible with existing and planned DSN capability but do impact the control center software. Telemetry subcarriers are square-wave; a sine-wave command subcarrier is expected from the DSN.

All antennas are RCP (right-hand circularly polarized). It is expected that the high-gain antenna will be used during the entire mission, except for near-Earth and trajectory correction maneuvers within 30 days of launch.

Both missions will use Viterbi (7, 2) coding. The ESA spacecraft will have a single engineering format and a single science format. Minor frame length will be 1024 bits with a 16-bit sync word. In the engineering format only two minor frames are required to obtain a major frame (European terminology calls a major frame a "format"). Thirty-two minor frames are required in the science format for one science major frame. Two major science frames are required (64 minor frames) to obtain an engineering major frame when in the science format.

*|70| = 70 degrees, absolute value.

The NASA spacecraft will use packet telemetry consistent with the "Multimission Packet Telemetry Guidelines and Standards for Deep Space Missions" (633-9) and a Reed-Solomon outer code. The transport frame length will be 8800 bits with a 24-bit sync word. The Reed-Solomon code is J=8, E=16, I=5. The source packet length will always be 4352 bits.

Both spacecraft will utilize tape recorders to maintain continuity during nontracking periods. The ESA spacecraft recording rates are 128, 256, and 512 b/s. Whenever the spacecraft is being tracked by a DSS, the ESA mission would like to maintain a real-time science transmission rate of 1024 b/s, although a backup rate of 512 b/s is provided. Playback takes place by interleaving real-time and playback frames at the ratios of 1 to 1, 1 to 3, or 1 to 7, resulting in transmission rates of 2048, 4096, or 8192. The ESA recorder implementation will result in playback minor frames being in reverse time order, but each individual minor frame will be forward (i.e., sync word still correct and in the same location as a real-time frame). Science, engineering, real-time, and playback frames will all look the same to DSN hardware and software.

The specific NASA spacecraft record and playback characteristics and formats are not yet established. It is known, however, that all transport packets will look identical to the DSN.

Achieving continuity of the science data for the life of the mission has been a major mission design consideration. The basic design assumes a single 34-meter 8-hour track per day per spacecraft. During the 16-hour nontrack time the onboard recorder will record science data at a reduced data rate, and during the tracking period, higher rate science will be sent in real-time along with a period of recorder dump. Although the daily track is the basic plan, the Project has been cautioned that at certain times during the mission a daily pass of the desired length may not be available due to conflicting requirements of other DSN users. In response some flexibility to take advantage of the telecommunication performance gain of a 64-meter antenna to utilize less frequent or shorter 64-meter tracks to achieve essentially the same net data return is being included in the design of the mission.

Table 1. Telecommunications parameters (all values are preliminary)

Spacecraft	Frequencies, MHz	Telemetry subcarriers, kHz	Telemetry data rates, b/s	Command subcarriers	Command data rates, b/s
ESA	S-up 2111.607253 S-down 2293.148148 X-down 8408.209876 (channel 9)	65.536 131.072	64 to 8192 in factors of 2. (128, 256, and 512 used for recording)	16.000 kHz	15.625 (125/8)
NASA	S-up 2116.040895 X-up[a] 7171.559413 S-down 2297.962963 X-down 8425.864197 (channel 22)	42.3 169.2	11.5 5,154.5 186.1 6,872.7 372.3 13,745.5 744.5 27,490.9 1,489.1 41,236.4 2,863.6 54,981.8 3,436.4	16.000 kHz	125.0 7.8125 (125/16)

	Antenna	Gain, dBi	Final power amplifier, W	Telemetry modulation index, rad
ESA	High gain (X/S) (1.65 m) Omni (S only)	TBD/TBD TBD	S: 5 X: 20	0.56: 64 0.65: 128 to 512 0.9: 1024 1.18 or 1.25: 2048 to 8192
NASA	High gain (X/S) (1.98 m) Medium gain (X only) Broad coverage (S only) Omni (S only)	42.5/30.8 XMT TBD/30.3 RCV 18.2 XMT 10.7 XMT 10.2 RCV TBD	S: 5 X: 22	32 levels between (TBD) and (TBD)

[a]Proposed.

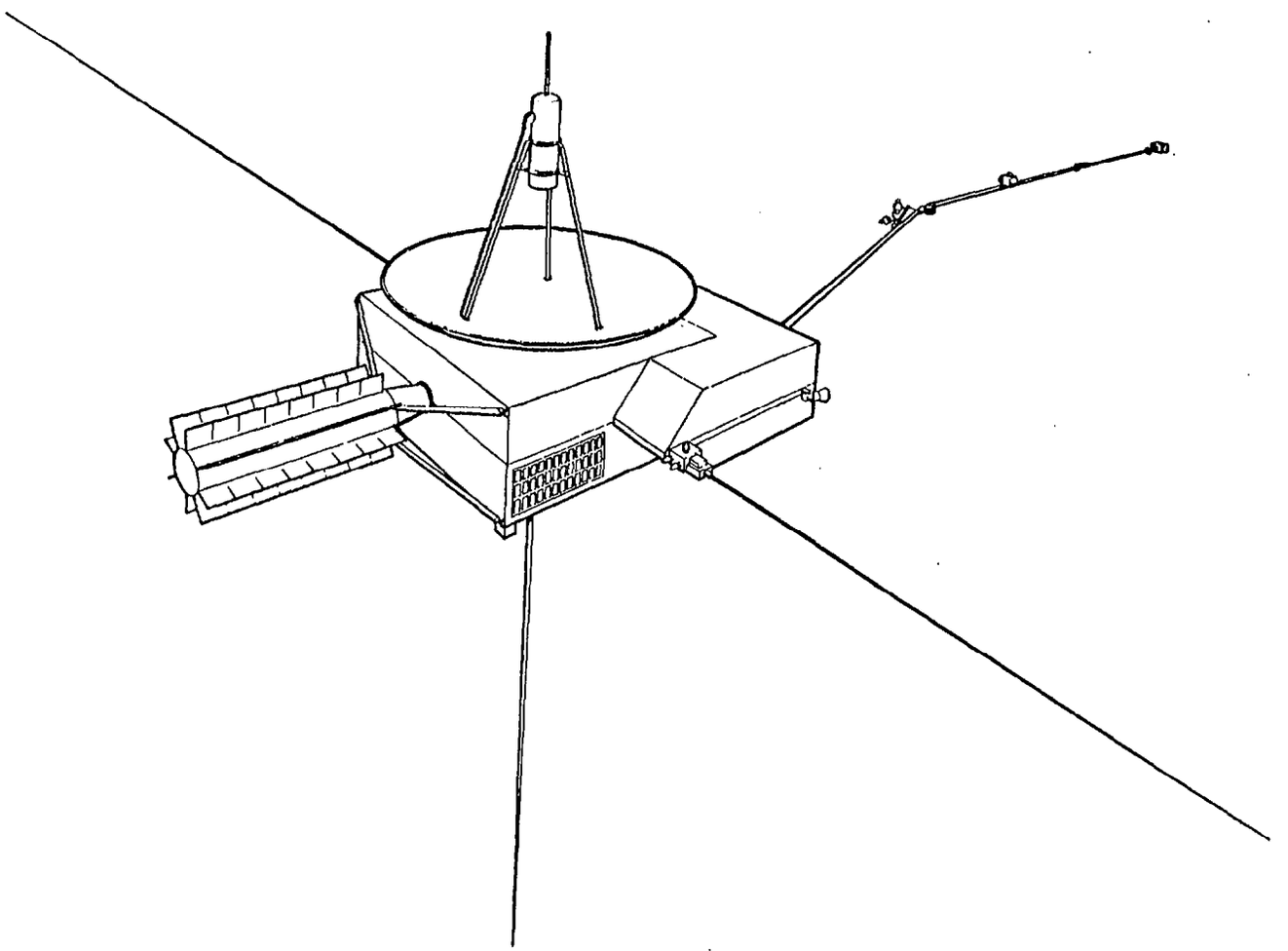

Fig. 1. ISPM spacecraft configuration

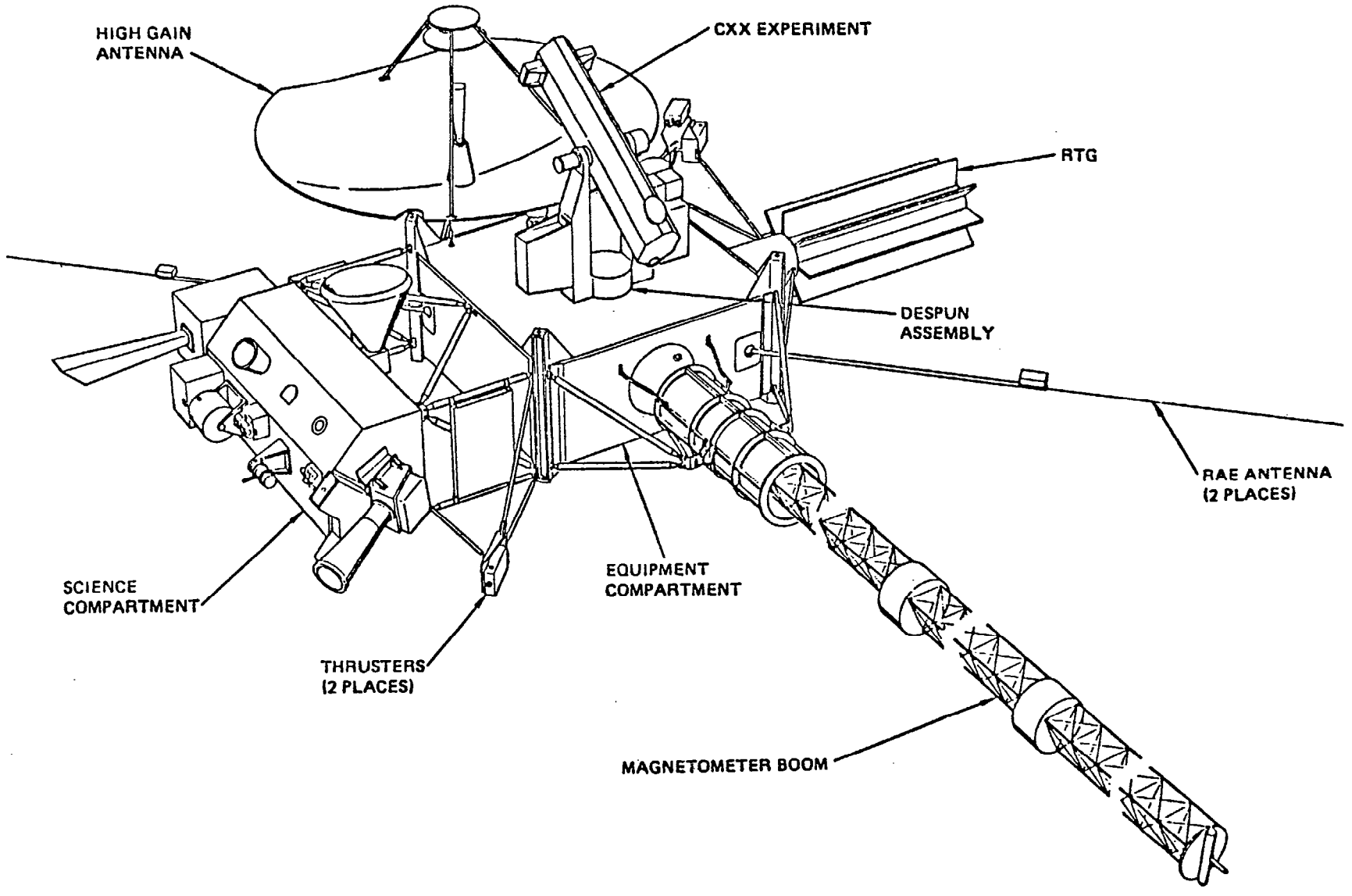

Fig. 2. NASA ISPM spacecraft configuration