Experimental Optical Fiber Communications Link

G. F. Lutes
Communications Systems Research Section

An optical fiber communications link 1.5 kilometers in length has been installed between the Interim Frequency Standard Test Facility and the Timing and Frequency Systems Research Laboratory at JPL. It is being used to develop optical fiber technology for use in the DSN and particularly for precise time and frequency distribution.

I. Introduction

An optical fiber communications link 1.5 km in length has been installed at JPL between the Interim Frequency Standard Test Facility and the Timing and Frequency Systems Research Laboratory along the route shown in Fig. 1. It is being used to develop optical fiber technology for use in the DSN, which includes learning to install optical fiber cable and connectors, learning to weld fiber and make splices and learning to design optical fiber communications links and to measure and verify their performance.

The present effort is concentrated on the development of precise frequency and timing distribution systems, which will eliminate the need for a frequency and/or timing system in each DSN Deep Space Station.

This article describes the experimental optical fiber communications link, the installation of the link and associated problems, and the link performance.

II. Description

The optical fiber communications link consists of a commercial optical transmitter and receiver and a 1.5-km length of two conductor optical fiber cable.

The optical transmitter contains a single transverse-mode solid-state laser diode which emits infrared power at a wavelength of ≈ 830 nm. It is biased in the linear region of its emission-vs-current curve so it can be linearly amplitude modulated. The optical output power is set for about 3 mW out of each end of the laser. The power emitted from the back of the laser is detected with a photodiode, and the resultant current is used in a negative feedback loop to stabilize the optical output power level. A thermoelectric cooler is used to cool the laser diode and hold its temperature to $\approx 25°C$.

The optical carrier emitted from the front facet of the laser is coupled to an optical fiber pigtail. About 50 percent of the power is lost in the coupling, resulting in a net optical carrier power of ≈ 1.5 mW launched into the fiber.

The optical receiver consists of an avalanche photodiode detector (APD) followed by a variable gain, dc to 3-GHz wideband amplifier. The gain of the APD is compromised in order to obtain the wide bandwidth. This results in a responsivity for the APD of only ≈ 25 amperes/watt.

The optical fiber cable was made up of a cable 1225 meters long, which was the longest continuous length available, and a cable 348 meters long spliced onto the end of it.

The cable contains two optical fibers enclosed in separate tubes. Each of these tubes is surrounded by strength members and a larger-diameter tube. These latter tubes are surrounded by more strength members, and the whole assembly is enclosed in an outer jacket (Fig. 2).

The fibers are of the multimode graded index type with a bandwidth of 400 MHz-km and 6 dB/km loss. The outside diameter of the fibers is 125 μm with a 62.5-μm core diameter. Each fiber is protected by a coating of lacquer.

III. Installation

The optical fiber cable was installed in the existing cable troughs and conduits with no special precautions taken. However, because the splice in the cable was too large to go through the existing conduit opening, the cable installation was made through a manhole near the Interim Frequency Standard Test Facility and pulled through the conduit in both directions from there.

Several delays occurred during the installation, due to heavy rain and/or construction, and the part of the cable not yet installed was left outside exposed to the elements for two weeks. When the installation was completed, an optical continuity test indicated that one of the two fibers was broken.

An optical time domain reflectometer (TDR) was designed and fabricated and used to locate a break in the open fiber about 260 meters from the end of the cable in the Timing and Frequency System Research Lab building. About 230 meters of this distance was contained in a roll of excess cable near the end. It was later determined that the break was between the third floor and the junction box on the second floor of the lab building. The cable was cut at the junction box and the broken fiber was pulled out of the cable and the length measured. An identical length of cable from the roll of excess cable in the lab was pulled through the junction box and cut off, exposing the ends of the fibers. No damage to the jacket was observed near the break.

After verifying continuity through both fibers back to the lab, the ends of the cable were welded together. Measurement of the physical distance between the end of the cable and the splice indicated an error in the TDR measurement of 3 meters out of 260 meters.

Continuity was again tested and there was still no continuity in the same fiber; this time the TDR did not indicate a break. It was concluded that this break was too far from the end of the cable in the lab building to be detected. The TDR was taken to the Interim Frequency Standard Test Facility, where a measurement indicated a break ≈ 240 meters from that end of the cable.

Difficulty was encountered in trying to determine the physical location of this break because the cable was accessible only at manholes spaced from 25 to 50 meters apart. The cable was cut in three adjacent manholes before the break was physically located. It was impossible to verify the TDR measurement with a physical measurement in this case. The cable was visibly damaged at this break, which turned out to be about a foot from the commercial splice. The commercial splice was removed so as to have only one splice at that location.

In order to gain experience the cable was welded at all three manholes even though the option of installing a new piece of cable between the outer two manholes and eliminating one splice was available. Upon completing these splices, continuity was verified through both fibers.

IV. Time Domain Reflectometer (TDR)

A block diagram of the previously mentioned time domain reflectometer (TDR) is shown in Fig. 3. The TDR consists of an optical transmitter and receiver, an optical directional coupler, and the required power supplies. The transmitter and receiver are identical to the ones used in the optical fiber communications link. The directional coupler is a commercial unit and has a directivity of 52 dB.

A pulse generator and oscilloscope are used with the TDR and are connected as shown in Fig. 3. A pulse from the pulse generator modulates the optical carrier emitted from the transmitter, producing an optical pulse that travels through the directional coupler and down the fiber. A pulse traveling in this direction is isolated from the receiver by the 52-dB isolation in the directional coupler. When this optical pulse arrives at a fiber end, break or termination, some of the power in the pulse ($< 4\%$) is reflected back down the fiber toward the TDR, where it passes through the directional coupler and is detected by the receiver.

The oscilloscope is used to measure the time delay between the resultant electrical pulse from the receiver and the original pulse from the pulse generator. This time delay is used to calculate the distance from the TDR to the fiber end.

There is no other practical way to find a break in a fiber contained in a cable.

V. Splices

Splices are made in a 19- X 12- X 5.5-cm commercial aluminum box. A standard watertight electrical conduit connector with a rubber compression grommet is installed on each end of the box, offset from the center as shown in Fig. 4.

The end of each optical cable to be spliced is pulled about 60 cm through one of the connectors. The end of each cable is stripped back to expose the fiber and the appropriate fibers are welded together. A clamp is installed to relieve tension on the weld and the weld is coated with a protective coating. The cables are pulled back through the connectors until about 3 or 4 centimeters of the outer jacket remains in the box and the fibers form a loop. The connector shells are tightened so that the grommets are compressed and clamp the cable firmly.

Silicon rubber cement is applied around the connectors and to the cover of the box, which is then installed, completing the splice.

VI. Tests

The two fibers were welded together at the far end of the cable and the transmitter and receiver were installed on the ends of the fibers in the Timing and Frequency Systems Research Lab. This gave a round trip path length of 3 km, with a total of 11 welded splices in the fiber. All of the following tests were performed with the optical fiber link in this configuration.

The instantaneous bandwidth of the link is limited by the fiber to 130 MHz (Fig. 5). Signal loss in the fiber is 24 dB. The power spectral density of phase noise (Ref. 1) is ≈ 120 dBc in a 1-Hz bandwidth, 10 Hz from a 100-MHz signal (Fig. 6). Intermodulation distortion products are down more than 40 dBc for two signals separated by 1 kHz around 25 MHz and with a modulation depth of 70 percent (Fig. 7).

The input and output impedances of the link are shown in Figs. 8 and 9. The phase across the link has been monitored overnight and found to have a maximum peak-to-peak variation of <1 degree at 100 MHz. This is <30 ps variation in propagation delay. Previous tests on propagation delay vs temperature indicate a change of ≈ 10 ppm/°C for multimode fiber.

Our tests verified that there are variations in loss and propagation delay as a function of flexure of optical fibers. This effect has been analyzed by Lau (Ref. 2) and the Timing and Frequency Systems Research Group is presently doing experiments to verify the analysis.

An Allan variance curve, phase stability vs sampling time, was conducted on the nonstabilized link with the results shown in Fig. 10. This data indicates that propagation delay stability in multimode optical fibers is as good as the best coaxial cable and much better than microwave communications links. It is suspected that single-mode fiber is more stable than multimode fiber, particularly as a function of flexure, and work is being done to verify this.

VII. Data and Signal Transmission Demonstration

A 60-MHz bandwidth digital signal, a 4-MHz bandwidth television signal and a narrowband test signal were transmitted simultaneously on different radio frequency carriers over the optical fiber link to demonstrate its low loss and wide bandwidth capabilities. The bit error rate of the digital signal and the television picture quality were not significantly affected by the optical fiber link.

VIII. Advantages of Optical Fibers

Optical fibers generally have greater bandwidth and lower loss than do coaxial cables. This is shown in Figs. 11 and 12, where attenuation and bandwidth data from manufacturer specifications for common types of optical fibers and coaxial cables have been plotted together.

The 7/8-inch air dielectric coaxial cable mentioned in Figs. 11 and 12 and in Table 1 is the lowest-loss, widest-bandwidth coaxial cable that data was available for. The fat fiber mentioned is a step-index-type multimode optical fiber with a 100-μm core diameter. It is generally used for short distance (<1 km) and small bandwidth (<20 MHz-km) applications. The large-diameter core makes it easier to adequately couple light-emitting diode sources ino it.

Optical fibers do not radiate or pick up RFI or EMI. Electrical isolation may be maintained between an optical transmitter and receiver, thereby eliminating ground loops and reducing the possibility of short circuits.

Optical fiber cables are small, lightweight and corrosion resistant. A high level of transmission security can be achieved in an optical fiber communication system because of the extreme difficulty of intercepting the signal without appreciably disturbing it. The cost of optical fiber cables is very low when compared to the cost of coaxial cables if the performance is considered. The costs of the various optical fibers and coaxial cables previously mentioned are compared in Table 1 and are given in terms of cost per meter as well as cost per meter per MHz bandwidth. It can be seen that the cost of

optical fiber cables is extremely small if the full bandwidth capability is utilized.

IX. Conclusion

Optical fiber communications systems are superior in some applications to alternative types of communications systems, such as coaxial cable, and terrestrial microwave systems. The optical fiber transmission medium has much lower loss and greater bandwidth than the best coaxial cable. The propagation delay is as stable as that of the best coaxial cable and an order of magnitude more stable than a microwave link. Optical fiber cable is also much less expensive than coaxial cable with equivalent stability.

It was found that the installation of optical fiber cables is comparable to coaxial cables; that discontinuities can readily be located using an optical time domain reflectometer; and that they can be repaired by welding even in an adverse field environment. Welded connections are no more difficult to make than installing coaxial or optical fiber connectors and are more stable and reliable.

Optical fiber communications systems are adequately developed for many applications and should be considered a viable alternative to established communications technologies.

References

1. Meyer, R., and Sward, A., "Frequency Generation and Control: The Measurement of Phase Jitter," in *The Deep Space Network, Space Programs Summary 37-64*, Vol. II, pp. 55-58, Jet Propulsion Laboratory, Pasadena, Calif., August 31, 1970.
2. Lau, K., "Propagation Path Length Variations Due to Bending of Optical Fibers," to be published.

Table 1. Cost of optical fiber cables and coaxial cables

Type	Number	Bandwidth	Cost/meter, $	Cost/MHz (BW) · meter, $
1-A	RG223U	1.22 MHz-km	1.05	0.86
1-B	RG214U	4.57 MHz-km	3.05	0.67
1-C	See notes	91 MHz-km	20.00	0.22
2	See notes	1000 MHz-km	2.50	0.0025
3	See notes	140,000 MHz-km	6.00	0.00004
4	See notes	500 MHz-km	0.90	0.0018

Notes:

Type 1A	Coax–0.216 in.–diameter, double shielded.
Type 1B	Coax–0.425 in.–diameter, double shielded.
Type 1C	7/8 in.–diameter air dielectric coaxial cable.
2	Multimode fiber optic cable, utilizing Corning 250-10D fiber.
3	Single-mode fiber optic cable, special order.
4	Telephone fiber optic cable.

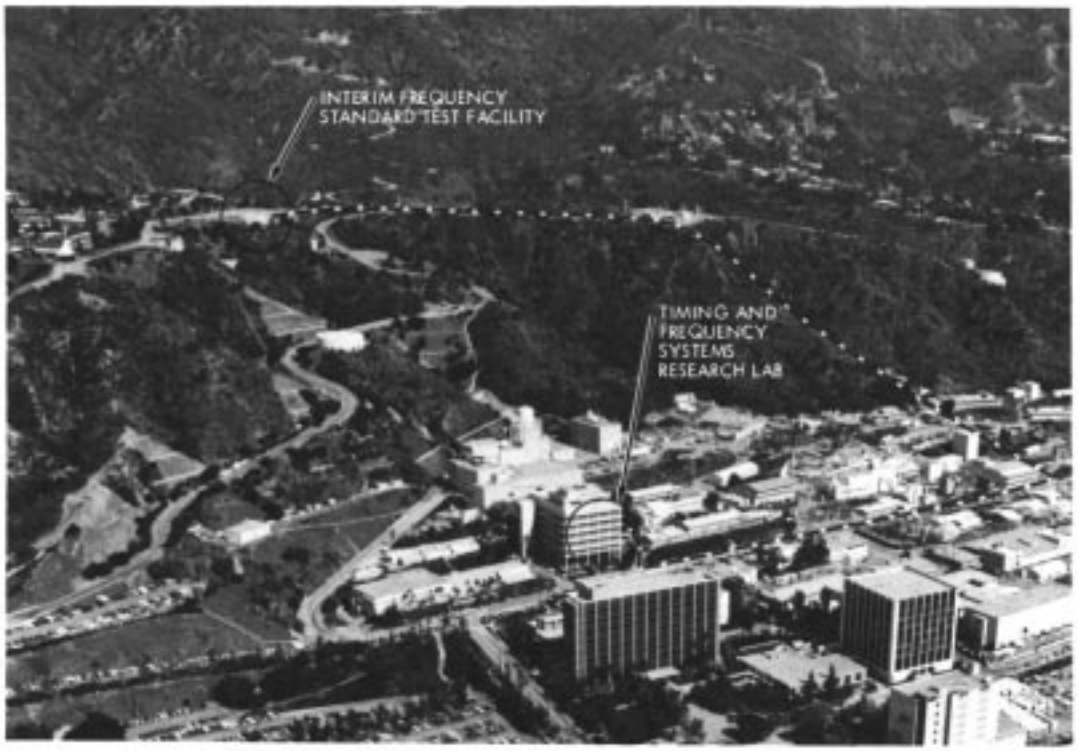

Fig. 1. Optical fiber cable route

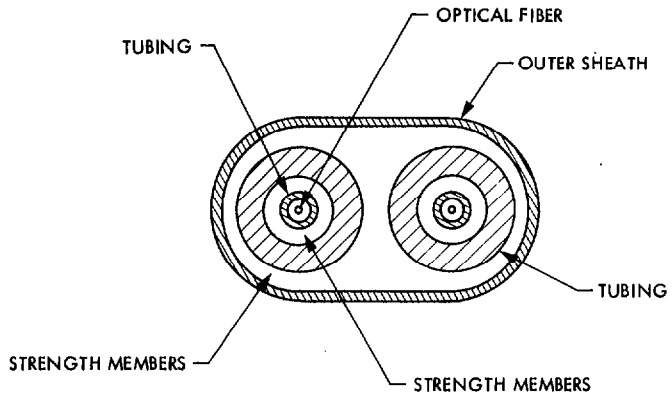

Fig. 2. Cross section of optical fiber cable

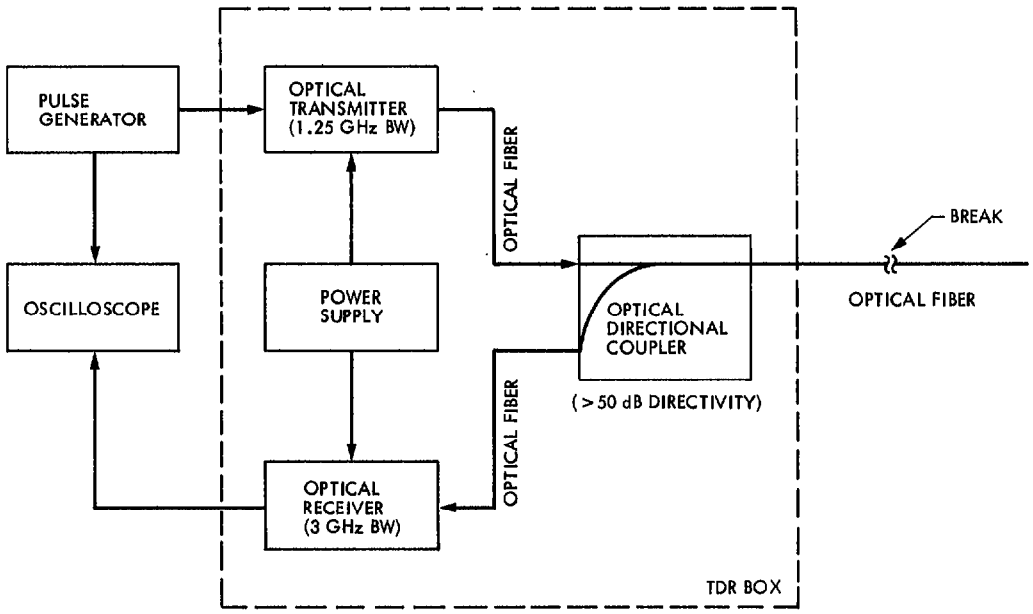

Fig. 3. Time domain reflectometer (TDR) block diagram

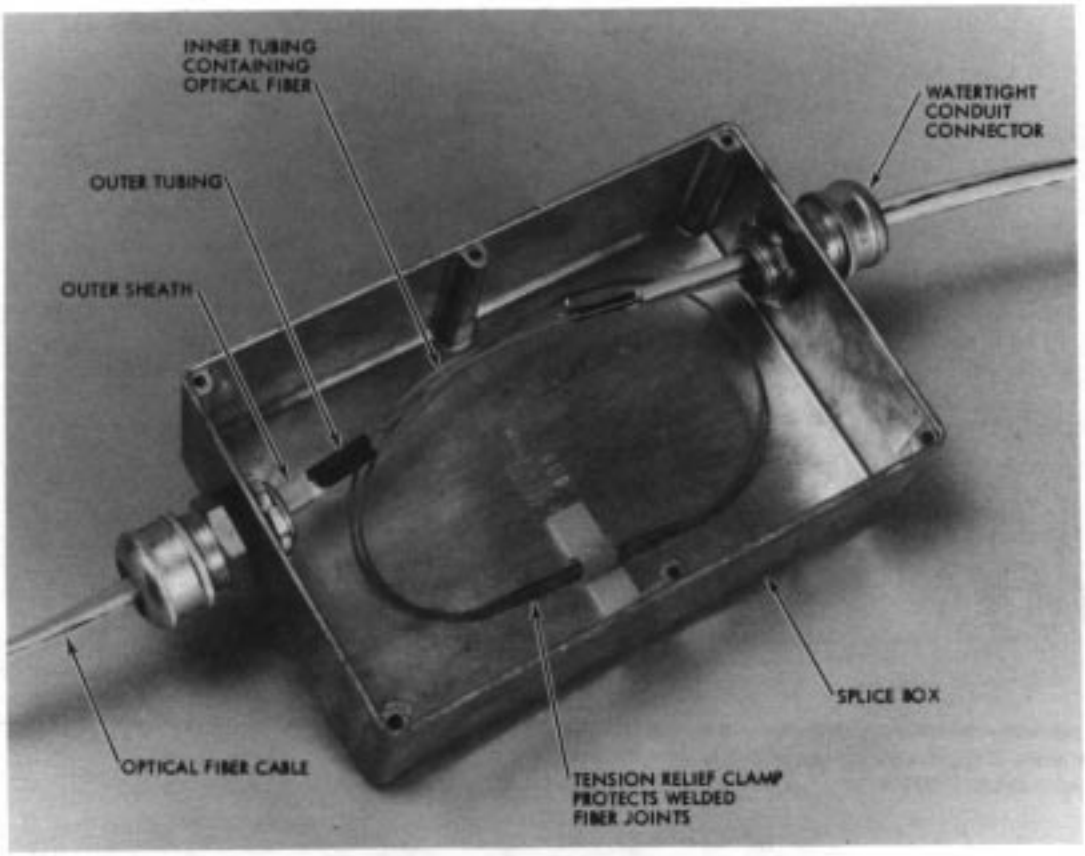

Fig. 4. Splice box

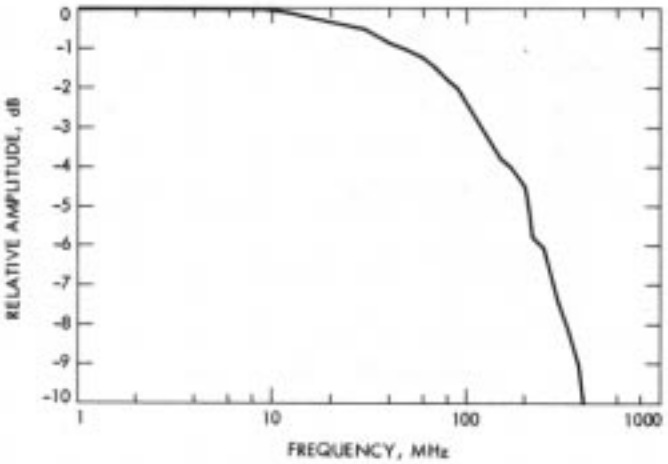

Fig. 5. Optical fiber bandwidth for a 3-km length

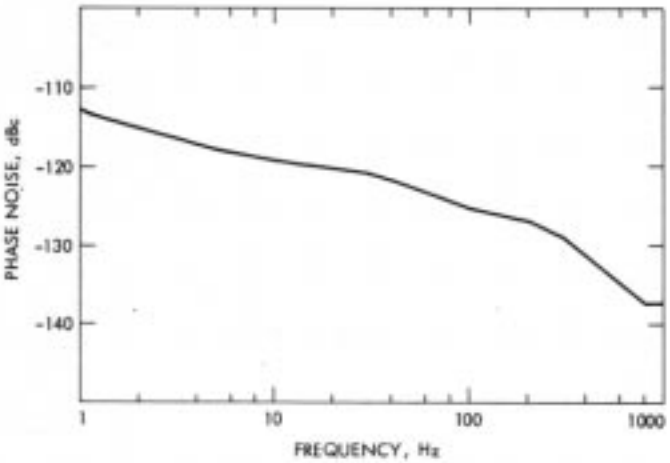

Fig. 6. Power spectral density of phase noise vs frequency (single sideband)

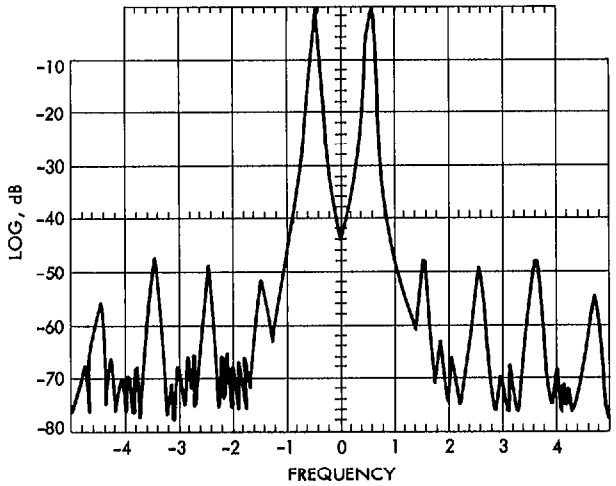

Fig. 7. Intermodulation distortion (horizontal scale = 1 kHz/div; vertical scale is relative in dB; center frequency = 25 MHz; modulation depth = 70%

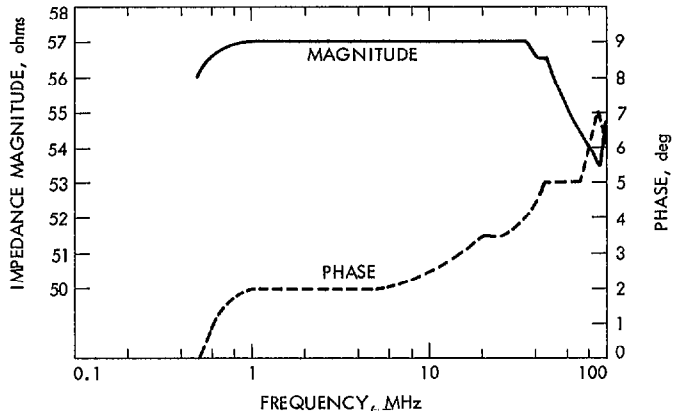

Fig. 9. Receiver output impedance vs frequency

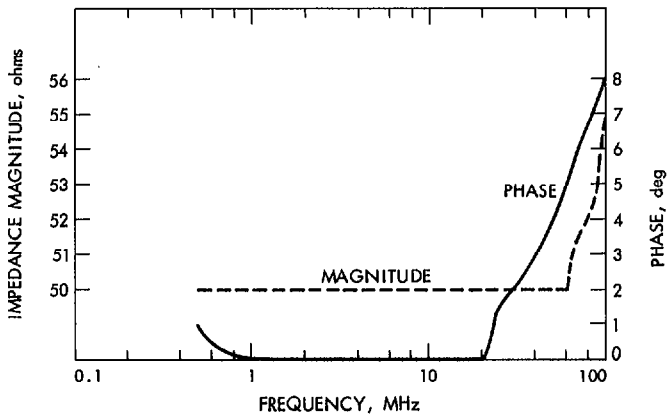

Fig. 8. Optical transmitter input impedance vs frequency (modulation input port)

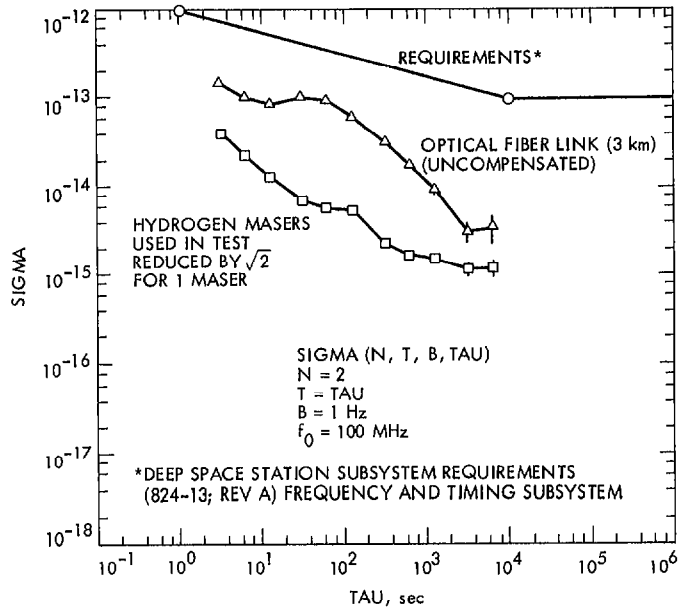

Fig. 10. Allan variance curve

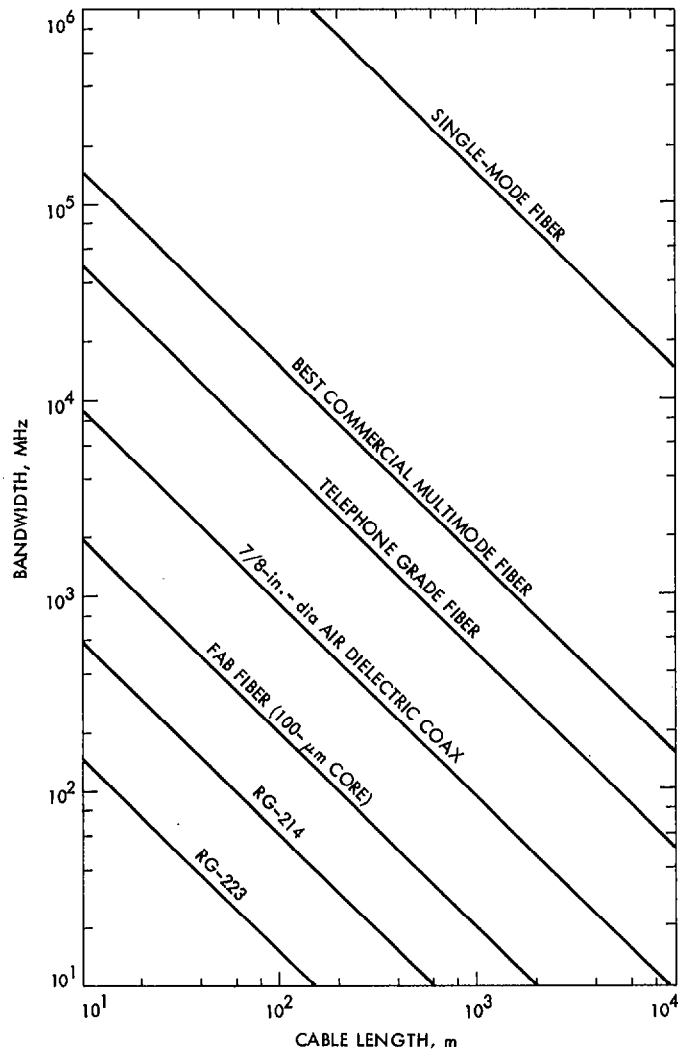

Fig. 11. Bandwidth vs cable length for some optical fibers and coaxial cables

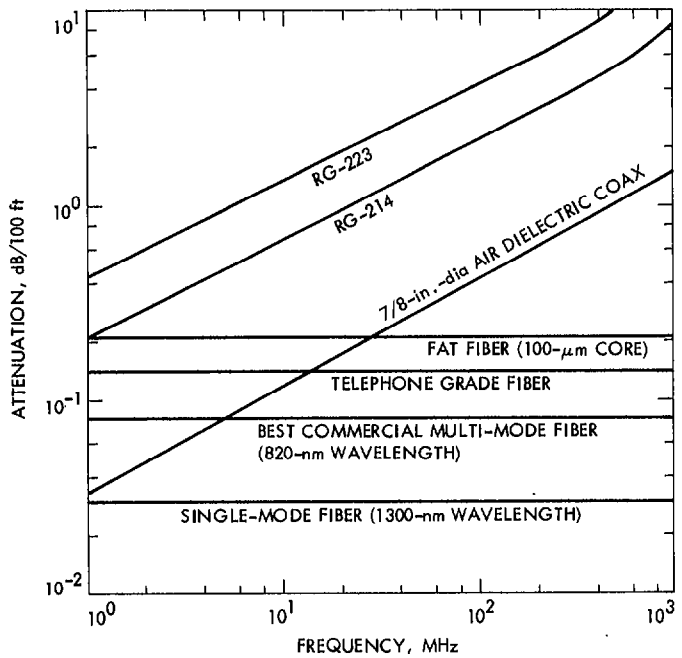

Fig. 12. Attenuation vs frequency for some optical fibers and coaxial cables.