TRISCAN: A Method of Precision Antenna Positioning

R. C. Bunce
Deep Space Network Support Section

TRISCAN is a method of improving the alignment between the boresight of the Deep Space Network antennas and a particular target, spacecraft, or radio source (star). For stars, the method works in conjunction with the noise-adding radiometer and the Antenna Pointing System to form estimates of the alignment offset coordinates. This information is then used to position the antenna for improved target alignment. A comparison with CONSCAN is included since a CONSCAN study led to TRISCAN development.

I. Introduction

TRISCAN was conceived after an exhaustive study of CONSCAN disclosed that the latter (using normal parameters) was effective only on relatively strong signal inputs. With strong inputs, the CONSCAN gain uncertainties and continual loss during scan were negligible, as was the antenna positioning noise. However, with weak signal inputs, as with weak stars and transient spacecraft dropouts, CONSCAN lost effectiveness. The major causes of this ineffectiveness were determined and a simplified system designed that avoided the bulk of the CONSCAN weak-signal error sources. The new system is called TRISCAN for triangle (antenna) scan, and is the subject of this article.

A detailed comparison of TRISCAN and CONSCAN appears later in the text. First, however, a general description of TRISCAN is given.

II. Description

TRISCAN functions to estimate the coordinate errors in hour angle and declination between the predicted (boresight) location and the true location of a subject star or spacecraft.

TRISCAN for stars is based on a set of measurements made by the noise adding radiometer (NAR). This device yields temperature readings proportional to the system background noise power plus any noise power present in the antenna pattern; the latter is attenuated by the antenna boresight offset. This total power is normalized to temperature, K. When the background temperature is subtracted from the total reading while the boresight is in the vicinity of a star, the result is the *effective star temperature* at its given offset from boresight and is a measure of the star input power (Fig. 1).

TRISCAN uses the measure of three effective star temperatures from the same star. The first (TO) is the measure at the star predicts or best-known location. The second and third (T1 and T2) are taken at the two base-points of the TRISCAN triangle. The triangle height is a downward excursion in hour angle (HA), while its base is a plus (+) and minus (-) (side ways) excursion in declination ($\pm DEC$). The antenna boresight is moved to these locations, but offset dimensions are precalculated so that boresight shift is an integer number of positioning increments. Thus, the positions are exact. The resulting triangle is always isosceles, but only approximately equilateral; it must accommodate the exact increments. The algorithm incorporates the triangle as it occurs.

Using the three effective star temperatures and the triangle geometry, the algorithm calculates estimated offsets from the predict point to the star. These are read as $HA*$ and $DEC*$ for final antenna positioning. The process is theoretically valid at stars of 1 K; it has been feasibility tested at a level of 5.6 K. A TRISCAN run requires roughly five minutes.

III. Comparison of TRISCAN and CONSCAN

TRISCAN is, literally, a fresh development that grew out of an exhaustive study of CONSCAN. While the study was in process, the VLBI project found that CONSCAN was inadequate for that use. The CONSCAN study was redirected at that time to discover those characteristics of CONSCAN that were causing the limitation, and possibly to design a new system of similar nature that would work under conditions such as those experienced by the VLBI Project.

The major CONSCAN drawbacks for low magnitude stars are as follows:

(1) CONSCAN loop gain is signal dependent, and this parameter is normally an estimate. The estimate error directly multiplies the positioning coordinate errors.

(2) CONSCAN generates analog commands while the Antenna Positioning System (APS) steps in digital, or incremental, jumps. Also, when the commands are accepted, an inherent APS error occurs proportional to the command, but asymptotic to an upper range mean of 0.010 degree. *If a command is carried out manually, in a step-by-step fashion, the error is much less.* However, for example, when a straight 0.004-degree radius is commanded by CONSCAN, the full transient is typically 0.007-degree for the boresight, an overshoot of 75 percent.

(3) To keep up with the drifts, external and self-generated, CONSCAN must operate continuously. Because of the radius mean offset, this results in a continuous signal attenuation down the pattern by the radius. A typical result is a 10- to 25-percent power loss.

(4) Because of the analog/digital APS action mentioned above, the CONSCAN integration circle is an irregular polygon (Fig. 2). The main effect is an additional gain/position error.

All of these effects combined (plus minor additions not mentioned) lead to a degradation of CONSCAN threshold, together with a steady-state decrease in signal-to-noise ratio (SNR). The result is that with tolerable steady-state parameters (R = 0.004 degree to 0.008 degree) the CONSCAN process bottoms out in the neighborhood of 10 K, thus proving unacceptable for star tracks in the neighborhood of 1 K.

As the listed CONSCAN characteristics became evident, a new scanning method of the same or lesser complexity was sought that would handle stars to this 1 K level. It seemed reasonable simply to conceive a method that bypassed the CONSCAN drawbacks, in hopes that the new system would have the required 10-dB sensitivity increase. The net result was TRISCAN. In one-by-one fashion, TRISCAN avoids the CONSCAN star problems as follows:

(1) TRISCAN is independent of loop gain and signal strength. It accomplishes this by using temperature ratios in which the source level divides out of the expressions. It does require, however, an accurate measure of the system temperature (for subtraction), but this is commonly available. CONSCAN integrates this away; it is thus needed for TRISCAN only.

(2) The TRISCAN triangle uses only integer increments of the APS for positioning. Further, these increments are manually stepped one at a time for maximum accuracy, and through only one coordinate at a time. They are called "exact" in this article, for data indicated no deviation from the input commands.

(3) TRISCAN is presently described as one shot for single runs. However, the runs could be sequenced if desired. The important consideration is that runs start and finish at the best known star location, analogous to the CONSCAN scan center. There is no scan loss after the triangle is transversed. If sequenced at intervals, this means no mean loss between scans (no continuous offset).

(4) As mentioned, the triangle is nearly exactly known and absorbs the digital nature of the APS inherently. The points are static during NAR integration, so position/level irregularities are minimized during measure.

With these known difficulties avoided, we make the assumption that the only TRISCAN errors arise from the NAR variance, as from the biorthogonal integrator in CONSCAN. The NAR noise effect, discussed later in this article, causes the TRISCAN 1-K bottom.

IV. TRISCAN Algorithm

A. Algorithm Inputs

We designate the points of the CONSCAN triangle as $P0$ (predict point), $P1$ ($P0 + \Delta HA$, $+ \Delta DEC$), and $P2$ ($P0 + \Delta HA$, $- \Delta DEC$). Any temperature $TN(PN)$ refers to the total temperature as read from the NAR. TN alone refers to the star equivalent temperature, or the NAR reading with the system (cold sky) reading subtracted.

A single TRISCAN run requires nine inputs:

(1) The star (approximate) declination, $DEC*$.

(2) The antenna beamwidth, W.

(3) The system (cold sky) temperature *near* the star, by NAR, TS, K.

(4) The ΔDEC excursion (the base), an integer number of antenna positioning increments, degree. This is an operator choice, typically 0.007 degree. The parameter affects signal loss during scan, and may be chosen smaller if loss is a critical effect. Scan accuracy may be degraded on weak stars (< 5 K) (probabilistic).

(5) $T0(P0)$, K, the predict-point NAR read-out (first).

(6) $T1(P1)$, K, at $P1$ as defined, NAR total.

(7) $T2(P2)$, K, at $P2$ as defined, NAR total.

(8) $T0'(P0)$, same as $T0(P0)$ but a second reading upon return after triangle "circuit", NAR total.

(9) $T\#(P*$ est), the NAR readout after final boresight positioning to star location estimate using TRISCAN offset calculations; $T\#$ by the NAR.

B. Triangle Size

The TRISCAN triangle lies with its center line, or height, along the predict; the HA axis, + downward. The triangle base is a DEC coordinate line, orthogonal to the HA line, with + to the right, and zero at the intersection. Thus ΔDEC as chosen is one-half the triangle base. For a perfect equilateral great-circle triangle, considering conversion of HA degrees to a great-circle dimension, the ΔHA readout for triangle height, and the triangle side P, would be:

$$\Delta HA^\circ = \frac{\sqrt{3}}{\cos(DEC*)} \Delta DEC^\circ \text{ (ideal)}$$

$$\rho = \sqrt{(\Delta HA \cos(DEC*)^2 + (\Delta DEC)^2}$$

The value of ΔHA as given is irrational in general, and not likely to be an integer multiple of the positioning increment. It is therefore automatically rounded in the algorithm to an integer value to obtain exact boresight locations at $P1$ and $P2$. This deviates the triangle from equilateral to isosceles so that the value of the two upper sides differ somewhat from 2 ΔDEC. This changes the qualifier on ΔHA from ideal to nearest integral positioning increment. The, we rewrite:

$$\Delta HA = \frac{\sqrt{3}}{\cos(DEC*)} \Delta DEC^\circ \quad \text{(Rounded to nearest antenna positioning increment)}$$

$$\Delta \widehat{HA} = \Delta HA \text{ (Rounded)} \times \cos(DEC*) \quad \text{(Great circle length of } \Delta HA\text{) (Noninteger)}$$

$$\rho = \sqrt{(\Delta \widehat{HA})^2 + (\Delta DEC)^2}$$

In this way, the algorithm defines an error-free triangle for TRISCAN. All additional deviations (such as angular curvature) are negligible for the small angular distances involved. The key purpose is to obtain dimensions for the scan that are integer steps in the Antenna Positioning System (APS). This eliminates ambiguity from this source (±0.001 degree at 64-m sites). The effect on final positioning error varies with offset; it reduces this error 20 percent (rough estimate), near the half-power point, over random dimensioning. The above estimate does neglect the *HA-DEC/AZ-EL* conversion error, which is presently unspecified.

C. Star Equivalent Temperatures

All star equivalent temperatures are obtained in the same way. The system temperature is subtracted from the given total temperature, as read out by the NAR. Thus:

$T0(P0) - TS = T0$, the equivalent star temperature at $P0$, K

$T1(P1) - TS = T1$

$T2(P2) - TS = T2$

$T0(P0) - TS = T0$

$T\#(P*$ est.$) - TS = T\#$, final equivalent star temperature after TRISCAN positioning is complete.

D. Equivalent Temperatures and the Antenna Pattern Model

The equivalent temperatures obtained at the triangle points (neglecting NAR variance for the moment) may be related to the star location by the angular distance from the point to the star. Let Z be the $P0$ predict distance, $R1$ and $R2$ the base-point distances, $R1$ to the right, or $+DEC$. Let $T*$ be the unknown star temperature at star-boresight alignment, the maximum equivalent value. We assume the antenna power pattern is of the Gaussian form near boresight, and down to the one-half power point. Equivalent temperatures are related to the antenna (Gaussian model) pattern by the theoretical mean set (see Fig. 3):

$$T0, T0' = T* \epsilon^{-K(Z)^2}$$

$$T1 = T* \epsilon^{-K(R_1)^2}$$

$$T2 = T* \epsilon^{-K(R_2)^2}$$

$T\# = T* \epsilon^{-K(\Delta Z)^2}$

$T*$ = star temperature at exact alignment

ΔZ = positioning error

Z, R_1, R_2 = angular distances as given on Fig. 3.

K = antenna pattern constant

$= 2.773/W^2$

W = antenna beamwidth, degrees

$T\#$ = post-TRISCAN equivalent temperature: the TRISCAN result.

E. TRISCAN Triangle Geometry

The preceding dimensions, and those required to fill out the algorithm, are given in Fig. 3. Note in particular that the polar form of the final positioning result is Z at the angle theta. Thus, the great-circle HA correction is Z cos (theta), while the DEC correlation is Z sin (theta). This correction set plays a key role in the remainder of the algorithm (subsection F).

F. Algorithm Offset Computations

To complete the algorithm and obtain the required offsets, the following computations take place in condensed form:

(1) Three items from subparagraph C combine by ratio to eliminate $T*$:

$$\overline{T0} = \frac{T0 + T0'}{2}$$

$$\frac{1}{K} \log_e \left\{ \frac{\overline{T0}}{T1} \right\} = (R_1^2 - Z^2) = a_1$$

$$\frac{1}{K} \log_e \left\{ \frac{\overline{T0}}{T2} \right\} = (R_2^2 - Z^2) = a_2$$

(2) The triangles bounded by Z, P, and R_1 or R_2 may be written:

$$R_1^2 - Z^2 = \rho^2 - 2\rho Z \cos(\theta - \alpha) = a_1$$

$$R_2^2 - Z^2 = \rho^2 - 2\rho Z \cos(\theta + \alpha) = a_2$$

(two equations in two unknowns, Z and θ)

or

$$\frac{\rho^2 - a_1}{2\rho} = Z \cos\theta \cos\alpha + Z \sin\theta \sin\alpha = A_1$$

$$\frac{\rho^2 - a_2}{2\rho} = Z \cos\theta \cos\alpha - Z \sin\theta \sin\alpha = A_2$$

or

$$Z \cos\theta = \frac{A_1 + A_2}{2 \cos\alpha} = \Delta\widehat{HA}*$$

$$Z \sin\theta = \frac{A_1 + A_2}{2 \sin\alpha} = \Delta DEC*$$

Only ρ, α, a_1, a_2, A_1, and A_2 must be calculated and combined. These give the position estimates required. For implementation, $\Delta HA* = \Delta\widehat{HA}*/\cos(DEC*)$. Rounded integer increments are used by necessity.

After positioning from $P0$ through $\Delta HA*$, $\Delta DEC*$, the power gain obtained may be determined by:

$$G = 10 \log \left\{ \frac{T\#}{T0} \right\}, \text{dB}$$

G. Algorithm Outputs

By way of summary, the algorithm yields eight outputs during the course of a run:

(1) ΔDEC: this is one-half the triangle base. It is normally a repeat of the algorithm input, except when the input is a noninteger in the positioning increment, or is outside the useable triangle limits (0.001 degree, 0.007 degree). Then, the program recycles.

(2) ΔHA, the triangle height: best integer positioning increment for (scaled) near-equilateral triangle. $\Delta\widehat{HA}$ is used in the algorithm.

(3) $\overline{T0}$, K: predict point star equivalent temperature (average of two).

(4) $T1$, K: star equivalent temperature at $P1$, triangle base, RH.

(5) $T2$, K: star equivalent temperature at $P2$, triangle base, LH.

(6) $\Delta HA*$ degree: correction in HA from $P0$ to star, estimated.

(7) $\Delta DEC*$ degree: correction in DEC from $P0$ to star, estimated.

(8) G, the gain of the run in dB: if the run was successful, G is always positive or zero, but its absolute value has no direct meaning, except as operational information. G has an upper limit: the dB increase on the antenna pattern from the predict point to exact boresight-star alignment. This normally ranges from 0 dB to about 3-dB maximum.

These outputs, interlaced properly with the inputs given previously, define the operator interaction with the algorithm. It is important that the ΔHA and ΔDEC excursions be mechanized properly, as shown on the triangle, and that they be taken incrementally, step-by-step, with each step the size of the positioning increment. ΔHA and ΔDEC increments should be stepped off separately: down and over, over two, over and back up; $P0/P1/P2/P0$, recording the NAR reading at each point. That completes the TRISCAN algorithm and its general implementation.

V. TRISCAN Feasibility Test

The TRISCAN method was tested for feasibility on June 25, 1980 at DSS 14. The first run went smoothly and within expectations; it is reported in Fig. 4 as a feasibility example. Later runs experienced difficulties resulting mostly from hardware anomalies. In particular, the maser was failing. These runs were for data for statistical evaluation; only one check-out run was planned, and obtained. All data (and the statistical variability measure) were finally put aside from the test results of all but the first run.

The star was 3C123, at an hour angle of 328.5 degrees and a declination of 29.6 degrees, was used for the feasibility run. Elevation was 38.756 degrees, and effective temperature at alignment was 5.855 K (calculated). System temperature was 22.919 K (Fig. 4). TRISCAN temperatures for the star ($T0$, $T1$, $T2$) were 4.876 K, 5.247 K, and 4.753 K. When these were placed in the algorithm, offsets of +0.010 $HA*$ and +0.002 $DEC*$ degree were obtained. A subsequent high-resolution CONSCAN run was taken, and it yielded the same $HA*$ offset, and +0.003 $DEC*$ degree in close agreement. The triangle was 0.014° (HA) and 0.007 (DEC).

When the TRISCAN correction was mechanized, the star level gained about 0.65 dB, out of a possible 0.7 dB. This indicates that TRISCAN pulled in to about 0.001 degree from an initial error of about 0.009 degree. The conclusion of feasibility appears valid.

VI. TRISCAN Error Sources

The TRISCAN method is subject to several error sources, with error defined as the absolute miss in boresight-star alignment after completion of a run and subsequent final positioning. There are two major sources of error:

(1) Inaccurate boresight positioning on the triangle.

(2) Inaccurate temperature readouts from the NAR, including the system (cold-sky) reference.

The first, boresight positioning error can result from APS instability, atmospheric displacements, and simple beam distortion due to antenna mechanical movements. In TRISCAN, APS instability is theoretically controlled by integerizing antenna displacements, taking them one at a time, and designating "home base" as the predict point, to minimize the correction excursions. These processes were adopted after a study of CONSCAN, where the consistent error effects were of the magnitude that random noninteger commands would bring about 1.0 M-deg, 1 sigma. Other distance error sources have not been considered; little can be done to minimize these sources that is not already incorporated in the hardware. Low-frequency random residual error sources are present, but can be minimized by a fast run.

The second error source, inaccuracies in the NAR readouts, is tangible and can be analyzed (except under exceptional circumstances, as when a maser fails). The NAR samples the total noise in the receiver channel, and converts this Gaussian input to a voltage proportional to power using a square-law detector (SLD). The detector output is integrated over 5000 samples/s for 30 seconds. Using Chi-square theory as a model, normalized to the sample count, the power standard deviation is less than 0.1 K when converted to temperature (30-K base). The device is gain-stabilized with a pulsed noise diode. Straight data analysis performed at DSS 14 indicated a standard deviation even less than that predicted above (0.06 K), 60 samples. However, the DSS 14 data does indicate an anomaly; the system temperature jumps at points by about 1.0 K, and holds. No explanation is evident.

In view of all the above, we assume (with apprehension) that the only remaining error source in TRISCAN is the NAR variance after integration. We disregard jumps, which are detectable by the dual P 0 reading.

Conversion of the NAR variance to the TRISCAN final positioning error is a complicated transcendental function. It was therefore carried out by machine for a full noise set (straight DSS 14 jump-free readouts), and a sequence of possible star positions. Since the position vectors were nearly Gaussian, the error distributions were all considered to be

Rayleigh in form. Initial offsets of 0.002, 0.004, 0.008, and 0.016 degree were investigated, permuted with equivalent aligned star temperatures of 1 K, 4 K, and 16 K. The mean final errors are shown in Fig. 5. The Rayleigh 80-percent limits around these means are large: (mean) × (1.92), (mean) × (0.44). Only the 1-K star leaves questions when the initial offset exceeds 0.010 degree. Two scans are suggested in these cases to bring the final position error to 0.003 degree or less.

VII. TRISCAN For Spacecraft

TRISCAN is as theoretically applicable for spacecraft antenna positioning as for star use. The major differences are that spacecraft-received power replaces star-effective power, and system temperature may be neglected (set to zero), since spacecraft power is normally well above the threshold level.

The NAR is not used in the spacecraft algorithm. The key quantity is spacecraft level in dB. This is converted to a convenient relative power level, replacing star temperature in the algorithm, by:

$$TN = WN = 10^{\frac{\mathrm{dBm}_N + K}{10}}$$

The triangle is taken as for star acquisition, with N given the corner "tip" values 0, 1, 2, and 0′. The parameter K is given any convenient value for scaling; it drops out as power ratios are calculated. A typical value for K is 150. In the algorithm, the system temperature TS is considered negligible ($TS = 0$).

The major problem in TRISCAN application to spacecraft is that the signal level sometimes varies rapidly for various reasons. TRISCAN will yield poor results if this variation approaches the antenna pattern attenuation during the TRISCAN run, which is some small fraction of a dB. It is necessary that the TRISCAN process be performed rapidly. Exact figures are not available, however, it is known that spacecraft signal level changes occur as rapidly (in cruise) as 1.0 dB/min. This would require the TRISCAN process to be performed in less than 12 seconds and indicates that the process would have to be automated.

Also, the dBm readout is physically remote from the APS. Automation would require some hardware implementation.

VIII. Summary and Conclusions

TRISCAN is without doubt a fresh method to position the antenna boresight at DSN locations, with unusual accuracy, in alignment with target stars and possibly spacecraft. Though presently a manual process, it could be automated as need occurs.

The key procedure used by TRISCAN is careful, incremental boresight adjustment about a triangle, with tip positions maintained in static state while the star (or target) equivalent temperatures (power levels) are obtained from NAR (or receiver AGC/dBm) readings.

TRISCAN mechanization has been chosen to minimize the effects of APS errors and system gain variations, hopefully leaving only the NAR variance as a residual source of error. On stars, this error causes the process to bottom out at very weak radio source levels.

A mechanization test at DSS 14 proved the process feasible. On a 5.6-K star, TRISCAN closed from about 0.009 degree to less than 0.001 degree. CONSCAN, run in parallel, required its maximum sensitivity condition to equal the TRISCAN run. CONSCAN used a radius of over 0.015 degree and an integration time of about 10 minutes.

The VLBI Project had discarded CONSCAN because of the low sensitivity under reasonable parameter limitations; it bottoms at about 10 K under such conditions. TRISCAN, comparably can theoretically close on stars around 1 K.

It is therefore reasonable to say that (all losses and errors considered) TRISCAN has a threshold that is up to 10 dB better than CONSCAN, and obtains this with a method that also improves present procedures at a strong signal, for its stable tracking condition centers on the nominal target, rather than at some distance from it. The steady-state loss is less.

TRISCAN has possible application as a CONSCAN interscan drift corrector and as a manual emergency backup procedure.

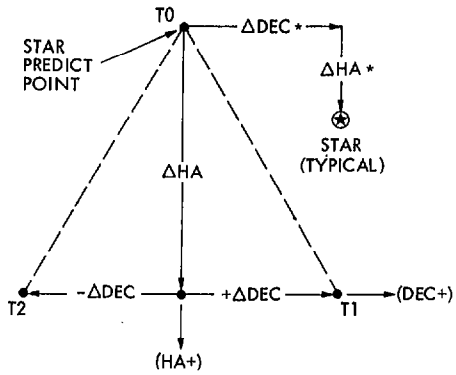

Fig. 1. TRISCAN method: basic triangle

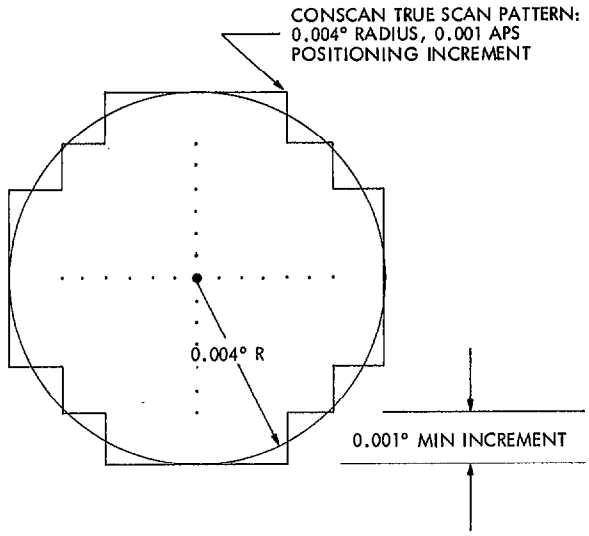

Fig. 2. CONSCAN true pattern with given parameters

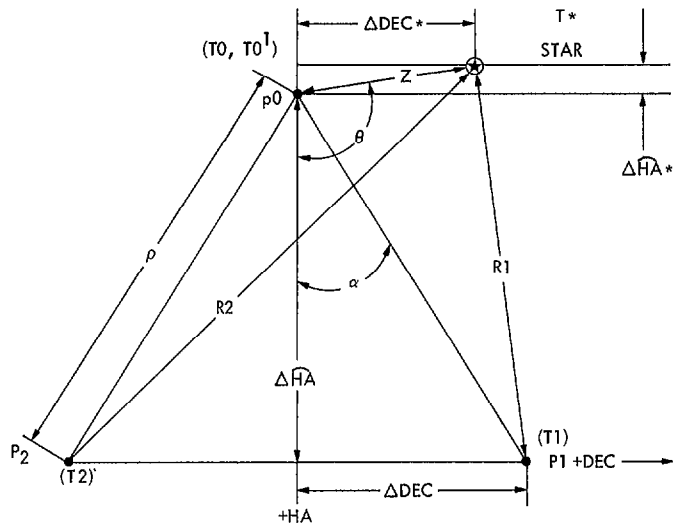

NOTE: ĤA IS THE GREAT-CIRCLE EQUIVALENT DIMENSION OF A CORRESPONDING HA MEASURE.

Fig. 3. TRISCAN algorithm model

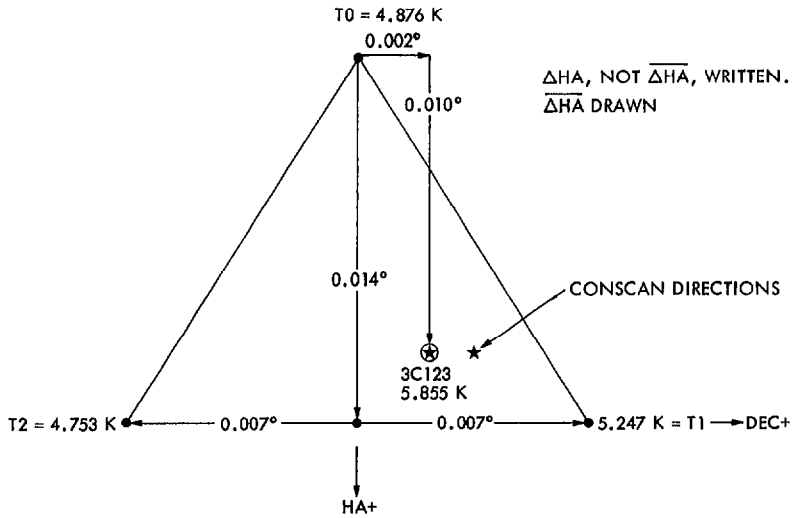

Fig. 4. TRISCAN triangle feasibility run

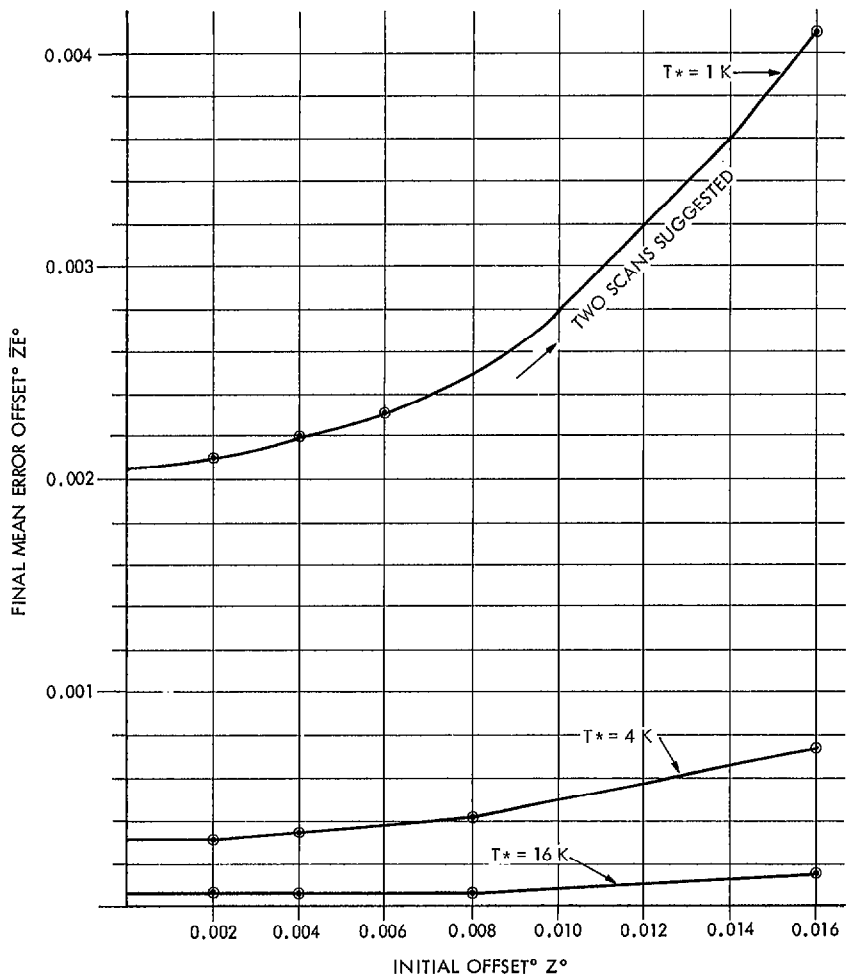

Fig. 5. TRISCAN error offset predictions