Ka-Band (32 GHz) Benefits to Planned Missions

D. M. Hansen and A. J. Kliore
Telecommunications Systems Section

This article documents the benefits of using 32 GHz downlinks for a set of deep space missions, as well as the implications to radio science and the DSN. The basic comparison is between the use of the current X-band (8.4 GHz) and a 32 GHz (Ka-band) downlink. There has been shown to be approximately an 8 dB (about 600%) link advantage for 32 GHz. This 8 dB advantage could be able to either reduce mission cost or improve mission science return.

Included here are studies on how the 8 dB advantage would be used for the Cassini and Mars Sample Return missions. While the work is preliminary, it shows that the 8 dB advantage can be exploited to provide large benefits to future deep space missions. There can be significant mass and/or power savings to the spacecraft, which can translate into a cost savings. Alternatively, the increased downlink telecommunications performance can provide a greater science return.

I. Introduction

The advantage of a higher link frequency comes from the fact that antenna gain increases in proportion to the square of the link frequency. While free space path loss also increases as frequency squared, there is a net advantage when the link employs a directive antenna at each end.

Implicit in the higher antenna gain is a narrower antenna beamwidth, which may make the task of antenna pointing more difficult. Also the effects of rain, clouds, and other atmospheric impairments are more significant at 32 GHz than at X-band. Further, antenna surfaces and structures must conform to closer tolerances to provide good performance.

The downlink frequencies of NASA deep space missions have increased from L-band (0.96 GHz) in the early Ranger days, through S-band (2.3 GHz), to the current use of X-band (8.4 GHz). Presently the technology of Ka-band (see Ref. 1 for specific frequency bands of interest) is becoming mature enough for serious consideration for near term missions. While optical frequencies may eventually provide even more advantage, optical communications technology is not expected to be ready for deep space applications for some time. The advantages of Ka-band over X-band, as well as its technological readiness appear to warrant its use in the next generation of deep space missions (Ref. 2).

Koerner (Ref. 3) has compared link performance at X-band and 32 GHz on the basis of fixed data volume during a DSN station pass, using various data rate strategies. The performance advantage of 32 GHz over X-band is very dependent on declination and DSN station location. However, over a broad

range of anticipated declinations, Koerner found at least one DSN station that provided at least an 8 dB advantage.

This article documents the analyses done in 1985 and 1986 on how the 8 dB advantage would be used for the Cassini and Mars Sample Return missions. It builds upon an earlier report by Dickinson (Ref. 4). There the benefits of 32 GHz operation were determined in terms of the minimum cost to both flight and ground systems. Here the criteria are what benefits the use of 32 GHz provides to flight projects and how various missions can use these benefits.

Sections I and II analyze the use of the 8 dB performance advantage for the Cassini and Mars Sample Return (MSR) missions, respectively. For Cassini, the use of 32 GHz allows for an increase in the data rate by a factor of five, if the baseline high gain antenna (HGA) is retained along with the baseline dc power allocation for communications. Alternatively the performance advantage of a 32 GHz link allows the use of a smaller antenna. The most attractive option is to reduce the output RF power (lower DC power), which provides a net cost savings to the spacecraft after the nonrecurring costs are paid because a 25 W RTG[1] unit can be removed.

For MSR, landed mass and size (for packaging considerations) are extremely important drivers. Under the current mission scenario the rover will only communicate with the ground when it is not moving; hence the communications hardware can use the power allotted for the locomotion function, so DC power is not a spacecraft driver. The 32 GHz frequency allows for the use of a smaller, lighter antenna than with X-band. Two options are studied. One uses a parabolic reflector; the second uses a flat plate array. The array provides the better mass and size performance of the two.

Section III analyzes the benefits of 32 GHz to radio science. It discusses mission dependent benefits for gravity wave and relativity experiments, solar corona studies and bistatic radar. While 32 GHz is not beneficial for all types of radio science, for the experiments listed above, the higher frequency reduces solar plasma and atmospheric effects on the signal. Section IV illustrates the relief available in DSN loading at 32 GHz in comparison to 8.4 GHz.

II. The 32 GHz Benefits for Cassini

The baseline Cassini telecommunications system design has an 8.4 GHz high rate downlink that uses the Voyager HGA (3.7-meter) and redundant 10.6 W X-band solid-state power amplifiers (XSSPA).

The spacecraft effective isotropic radiated power (EIRP) at X-band is 87.73 dBm (see Table 1). The antenna aperture efficiency is 72.5%, based on measured data. The pointing loss assumes upgraded sensors from the Comet Rendezvous Asteroid Flyby (CRAF) mission baseline to achieve a boresight error of 0.134 degrees. This EIRP provides a nominal downlink data rate of 30 kbps at X-band.

Based on Koerner (Ref. 3), an 8 dB advantage is assumed. The Cassini mission will be largely near a +20 degree declination. At this declination the northern stations will have a 9 dB 32/8.4 GHz advantage with 90% link confidence whereas Canberra will have about a 7 dB advantage. Thus, 8 dB is a good approximation for illustrative purposes. Other assumptions for the 32 GHz design are as follows: (a) the 32 GHz power conversion efficiency is 21%; (b) the 32 GHz exciter power is the same as the 8.4 GHz exciter power; (c) Voyager HGA efficiency is the same at 32 GHz as it is for 8.4 GHz (Cassegrain feed); and (d) a 2.3 GHz downlink is transmitted via the HGA for radio science.

Table 2 shows a number of options for the telecommunication subsystem on the Cassini spacecraft using various combinations of 32 and 8.4 GHz equipment.

A. Option #1: Current Cassini Baseline

The baseline for Cassini is the all X-band configuration as described earlier.

B. Option #2: All 32 GHz System

The X-band downlink is deleted entirely. An array feed power amplifier (AFPA) with electronic beam steering (EBS) is assumed. The AFPA has 21 elements.[2] The EBS requires that the spacecraft have a fiber optic rotation sensor (FORS) to provide precise pointing knowledge. The antenna pointing calibrations will be better due to the narrower beam. This leads to a pointing error of 0.107 degree and, with the EBS, a pointing loss of 0.50 dB.[2]

It is assumed that the antenna aperture efficiency is the same at 32 GHz as at 8.4 GHz so the 32/8.4 GHz advantage is 8.0 dB. There are no circuit losses for the AFPA, so to achieve

[1]Radio isotope thermonuclear generator (RTG) is a source of onboard dc power.

[2]Boreham, J. F., "A 21 Element EBS Array Feed for the SOTP Spacecraft," JPL IOM 3360-85-030 (internal document), Jet Propulsion Laboratory, Pasadena, California, October 22, 1985, and Boreham, J. F., "A Further Explanation of Ka-band Spacecraft HGA Pointing Control Options," JPL IOM 3360-85-033 (internal document), Jet Propulsion Laboratory, Pasadena, California, December 10, 1985.

the same received SNR on the ground the spacecraft RF power can be reduced by 8.82 dB (includes circuit losses and the difference in pointing error).

Boreham[2] has suggested that an allowance for one module failure be made. This increases the transmitted power by 0.44 dB. This means that the 32 GHz power level is 8.38 dB less than at X-band or 1.5 W. Assuming a 21% power conversion efficiency this requires 7.3 W of DC power. The transmitter mass is 3.0 kg. There is an increase in the mass (+2 kg) and power (+2 W) for the EBS.

Deletion of the redundant 10.6 W XSSPAs results in a mass savings of 5.4 kg. Overall, this results in a small mass savings for the radio frequency subsystem (RFS). The required DC power drops from 40 W to 9.3 W for a savings of 30 W. This allows for dropping a 25 W RTG. Priced at $200K/W this means a $5M savings.

The nonrecurring cost for the 32 GHz hardware is $7M. The recurring cost is $4.4M. There is a savings of $1M for dropping the 10.6 W XSSPAs. The mass, power and cost deltas are listed in Table 2.

C. Option #3: 32 GHz Prime With Minimum 8.4 GHz Backup

While replacing the 8.4 GHz downlink with an all 32 GHz system appears reasonable there are good reasons to keep an X-band system aboard. The X-band low gain antennas (LGAs) are on-board the spacecraft for the uplink. The 32 GHz LGAs for a near-earth downlink would have to be added. The performance of an LGA 32 GHz link may be 3–4 dB worse than a comparable X-band LGA link. This may require use of the HGA more during the near-earth phase.

A 32 GHz redundant link through an LGA may require separate amplifiers. The AFPA cannot be used for a 32 GHz LGA link. There could also be large circuit losses for the cable runs to the LGAs. If 32 GHz TWTAs were used with the HGA they could also be used for the LGAs, but then a different type of pointing system would be required. Pulse plasma thrusters or reaction wheels would provide the necessary pointing precision but their mass and/or power penalties are very severe. Thus, to the AFPA/EBS system considered in Option #2 is added an X-band capability. Specifically, 3.0 W XSSPAs are added to Option #2 for the near-earth link and as a backup for the 32 GHz downlink. These are modules in the CRAF 5.6 W XSSPA. The X-band RF power is decreased by 5.5 dB. There is also a 1 dB loss in X-band gain for the HGA because the feed is switched from Cassegrain to focal point.

It is estimated that the 3.0 W XSSPAs will add 1.5 kg of mass and that each will consume 10 W. The nonrecurring and recurring costs are $0.5M and $0.4M respectively.[3] There is only a slight increase in required power (9.3 W – 10 W) because the EBS is not needed for X-band operation.

D. Option #4: 32 GHz Prime With Higher Power 8.4 GHz Backup

The baseline CRAF 5.6 W amplifiers are used instead of the lower power 3.0 W XSSPAs of Option #3. No additional nonrecurring costs should be required. The recurring cost for a pair of 5.6 W XSSPAs is $600K. The 5.6 W XSSPA requires 20 W of DC power, which is 10 W more than the 32 GHz AFPA/EBS. Power sharing on the spacecraft is required to use this amplifier as a backup. By adding a switch and an orthomode feed the power from both XSSPAs could be summed to provide near baseline X-band perfomance. This will, of course, require more DC power. The two 5.6 W XSSPAs add 3.6 kg of mass.

E. Option #5: 32 GHz Prime With Half-Size Antenna

A smaller (1.7-meter) antenna is less expensive than the 3.7-meter size, and permits more relaxed pointing; EBS is not required. The baseline AACS system is adequate. It is assumed that the baseline 10.6 W XSSPAs are kept onboard the spacecraft.

The 32 GHz RF power is determined by assuming use of the 40 W DC prime power required for the X-band baseline and the 21% power conversion efficiency. This gives an RF power of 8.4 W. At this power level a 1.7-meter dish is adequate to achieve the same received SNR. This uses an AFPA with no circuit loss and an antenna with aperture efficiency of 60%.

According to Dickinson (Ref. 4), the reduction in antenna size will save 18 kg and $600K. The non-EBS AFPA nonrecurring and recurring costs are $5.8M and $3.4M, respectively. The mass is 3.0 kg. These numbers are all for a 21-element array. However, the higher power level may require more than 21 elements in the array. Hence both the costs and mass estimates may be higher.

The smaller antenna reduces the X-band and S-band HGA performance by about 7 dB. It may also allow for a different spacecraft design using a gimballed antenna instead of a body-fixed Voyager HGA. Figures 1 and 2 show the baseline Cassini spacecraft and the same spacecraft with a smaller antenna, respectively.

[3]Personal communication with A. L. Riley, Spacecraft Telecommunications Equipment Section, December 1985.

F. Option #6: 32 GHz Performance Augmentation

This option adds a full capability 32 GHz system to the baseline Option #1. This is the most expensive option. By using all of the available DC power and subtracting 2 W for the EBS, 8 W at 32 GHz could be generated. This allows for returning the baseline data rate (30 kbps) into a 34-meter station or increasing the data rate by a factor of five.

The X-band performance is reduced by about 1 dB by switching to a focal point feed, a move necessitated by the 32 GHz AFPA at the cassegrainian focus.

As in option 5, the nonrecurring and recurring costs may be greater for this higher power option. More elements will probably be needed because of the higher power requirement.

III. The 32 GHz Benefits for the Mars Sample Return Mission

A. Introduction

This section compares the mass and DC power requirements of two telemetry system designs for a Mars Sample Return Rover. The two frequencies are the current 8.4 GHz and the proposed 32 GHz. Comparisons are made also for the 34-meter high efficiency DSN antenna and the 70-meter DSN antenna subnets.

The Rover mission is conceived as highly interactive with the Earth-based operations. Images of a possible route are sent to Earth. Based on decisions there, commands are sent to the rover. It moves, stops, takes pictures and starts the cycle over again. Movements are limited to the Mars horizon, approximately 0.245 km, 10 minutes for playback per hour, Mars daytime only, and no operation in potential dust storms. These characteristics together with credible imaging system properties at 120 kbps and a 4:1 data compression algorithm yield a Mars-to-Earth channel operating rate of 30 kbps.

A key constraint is the rover antenna envelope which must be less than 1.4-meter in maximum dimension (diagonal/diameter) because of packaging considerations. The last key assumption is that the entire locomotion power of 120 W raw DC is available for downlink communications when the Rover is stopped.

Two types of rover-borne transmission options are evaluated. These are a parabolic antenna with traveling wave tube amplifier attached, and a flat planar array antenna. The designs are evaluated at both frequencies and for reception by both 34-meter HEF and 70-meter DSN stations.

B. Methodology

Telecommunications link design control tables yield transmitter power gain products required to communicate from the Rover to each DSN aperture size. Then, by using mass relationships for antenna size, TWTA power level, heat radiation, structure and DC power, system mass is minimized subject to the constraint that DC power be less than or equal to 120 W and that the envelope be less than or equal to 1.4-meter diagonal/diameter.

Figures 3 and 4 show the mass minimization results for each frequency and DSN antenna combination with each Rover antenna type, respectively. Figures 5 and 6 show the spacecraft antenna aperture area results corresponding to the minimum mass configurations. Figures 7 and 8 show the DC power results corresponding to the minimum mass configurations. In all cases, the DC power used is less than the 120 watts allowed.

This analysis shows a clear mass advantage of the 32 GHz system over the 8.4 GHz system with either antenna type. This preference is increased when communication through the 34-meter apertures is required. Other advantages attendant to 32 GHz design are that (1) mission reliability will improve if both DSN aperture types can support the mission; (2) a 120 kbps high activity science mode can be supported by the 70-meter aperture; and (3) network loading in the 2000 AD era, although not a demonstrable problem now, would favor being able to operate with 34-meter capability.

Between the two antenna types, other packaging considerations favor the 32 GHz array. The entry aeroshell imposes a volume constraint as well as an area constraint. A flat plate array occupies less volume than a parabolic antenna of the same area. Furthermore, the area constraint becomes important at 0.8 m^2 and absolute at 1.6 m^2. In all cases 32 GHz array is less than or equal to 0.4 m^2.

IV. The 32 GHz Benefits for Radio Science

The term radio science encompasses a number of diverse disciplines that have distinctly different and often conflicting requirements. Therefore, the magnitude of improvement that can be expected from the introduction of a 32 GHz downlink depends on the specifics of individual experiments.

For example, the very effects of propagation through refractive plasma regions that are the objectives of those who wish to study the solar wind and interplanetary plasma are regarded as corrupting noise by those who wish to use the radio link to search for gravitational waves and to test competing relativity theories. By virture of its higher frequency, 32 GHz

offers a reduction in noise caused by interplanetary plasma, but at the same time it is less sensitive to the effects of tenuous plasma regions that are desirable targets of observation by propagation scientists, such as planetary nightside ionospheres and cometary ion tails. However, in order to accurately measure such tenuous plasma regions, it is necessary to use two coherent downlink frequencies, and it will be the other (lower) frequency such as S-band, for example, which will ultimately determine the sensitivity to tenuous plasma.

In the following paragraphs, each major area of radio science is reviewed relative to the impact of a 32 GHz downlink.

A. Gravitational Waves and Relativity

In this area, the reduction of noise due to the interplanetary plasma would improve the detectability of gravitational waves. Note that the improvement would be far greater if a Ka-band uplink could also be used.

B. Solar Corona Studies

For these measurements, which are concerned with the structure and turbulence in the solar corona, 32 GHz would allow deeper penetration. (The present limit with X-band is about 1.4 solar radii.)

C. Gravity

The presence of 32 GHz on the downlink would help reduce the noise on the Doppler data that are used to estimate the masses of planetary, asteroidal, and cometary bodies, and hence lead to more accurate estimates.

D. Propagation Science

In this area, which deals with planetary and cometary atmospheres and ionospheres through their effect on the propagation of spacecraft signals, the impact of 32 GHz is roughly neutral. In the case of planetary atmospheres, the greater gain of similarly sized spacecraft antennas at 32 GHz would increase the available signal margin, but for deep penetration in atmospheres such as those of Venus and the outer planets, much of this margin would be cancelled because of increased losses due to absorption and scattering. In the area of measuring tenuous dispersive media such as planetary and cometary ionospheres, a lower frequency (such as S-band or L-band) is required in addition to the 32 GHz and it is this lower frequency that determines the sensitivity.

E. Bistatic Radar

The roughness characteristics of planetary, cometary and asteroidal surfaces can be investigated by means of bistatic radar. For close encounters, such as cometary rendezvous missions, the narrow beamwidth of a 32 GHz downlink would lead to improved spatial resolution.

V. The 32 GHz Benefits for Network Loading

The attractiveness of 32 GHz for downlink channels is illustrated in Fig. 9. It shows that at 32 GHz, a 70-meter station has the equivalent aperture of an array at X-band of a 70-meter, a 32-meter high efficiency (HEF), and, a 34-meter (all at Goldstone) plus the array of antennas at the Very Large Array (VLA) in New Mexico. This array will be used for the Voyager Neptune encounter. It is a special one-time event. A 70-meter at 32 GHz would provide the same capability on a continuous basis for future deep space missions.

Also, at 32 GHz a 34-meter HEF is equivalent to an X-band 70-meter antenna in terms of receiving capability. This is also shown in Fig. 9. The use of a 34-meter antenna reduces commitments for 70-meter support. It provides missions and the DSN some flexibility in providing necessary mission support, and offers potential for relieving network loading conflicts.

VI. Conclusion

This article has looked at using 32 GHz as the downlink frequency for future deep space missions, utilizing the 8 dB performance advantage for 32 GHz relative to 8.4 GHz.

The two missions discussed, Cassini and MSR, could readily make use of this 8 dB. Cassini would probably use a lower transmit power that would allow for dropping an RTG from the spacecraft. Alternatively, the size of the antenna could be reduced, which would permit a different spacecraft configuration. For MSR, power is not a driver; mass is. The use of 32 GHz would allow for a smaller, less massive antenna to be flown.

This article has documented work done on 32 GHz in 1985 and 1986. In the next few years, better cost and performance estimates will become available with more analysis as the Ka-band development evolves.

References

1. de Groot, N. F., "Ka-band (32 GHz) Allocations for Deep Space," *TDA Progress Report 42-88*, Jet Propulsion Laboratory, Pasadena, California, February 1987.

2. Smith, J. G., "Ka-band (32 GHz) Downlink Capability for Deep Space Communications," *TDA Progress Report 42-88*, Jet Propulsion Laboratory, Pasadena, California, February 1987.

3. Koerner, M. A., "Relative Performance of X-band and 32 GHz Telemetry Links on the Basis of Total Data Return Per Pass," *TDA Progress Report 42-87*, Jet Propulsion Laboratory, Pasadena, California, pp. 65–80, November 1986.

4. Dickinson, R. M., "Comparison of 8.415-, 32.0- and 565646-GHz Deep Space Telemetry Links," *JPL Publication 85-71*, Jet Propulsion Laboratory, Pasadena, California, October 15, 1985.

Table 1. Cassini EIRP

Parameter	Design Values	Tolerances
10.6 W XSSPA	40.25 dBm	±1.00 dB
Transmit CKT Loss	−0.45 dB	±0.20 dB
Antenna CKT Loss	−0.30 dB	±0.10 dB
Antenna Gain	48.80 dBi	±0.50 dB
Antenna Pointing Loss	−0.57 dB	(0.134° of boresight, maximum value)
Total	87.73 dBm	

Table 2. Cassini 32-GHz options

Option	Antenna Size, m	Frequency, GHz	Antenna Pointing, deg/Loss, dB	RF Power, W	DC Power, W	Transmitter Mass, kg	AACS Mass, kg	AACS Power, W	Δ Mass, kg	Δ Power, W	Δ Cost* Power	Δ Cost* Hardware Non-recurring	Δ Cost* Hardware Recurring
(1) X-Band Baseline	3.7	8.415	0.134/−0.57	10.6	40	5.4	10	10	--	--	--	--	--
(2) 32 GHz with AFPA/EBS	3.7	32	0.107/−0.50	1.5	7.3	3.0	12	12	−0.4	−30.7	($5M)	$7M	$3.4M
(3) Add 3.0 W XSPPAs to #2	3.7	8.415	0.107/−0.36	3.0	10	4.5	12	10	+1.1	−30.7	($5M)	$7.5M	$3.8M†
(4) Add 5.6 W XSSPAs to #2	3.7	8.415	0.107/−0.36	5.6	20	6.6	12	10	+3.2	−30.7	($5M)	$7M	$4.0M†
(5) Smaller Antenna 10.6 W XSSPAs	1.7	32	0.107/−0.96	8.4	40	8.4	10	10	−15.0	0	0	$5.8M	$2.8M
(6) Add Ka-Band AFPA to Baseline	3.7	32	0.107/−0.50	8.0	38	8.4	12	12	+5	0	0	$7M	$4.4M†

*Tolerances on cost numbers are +30% and −10%.

†Dual frequency S/X feed, TBD dollars.

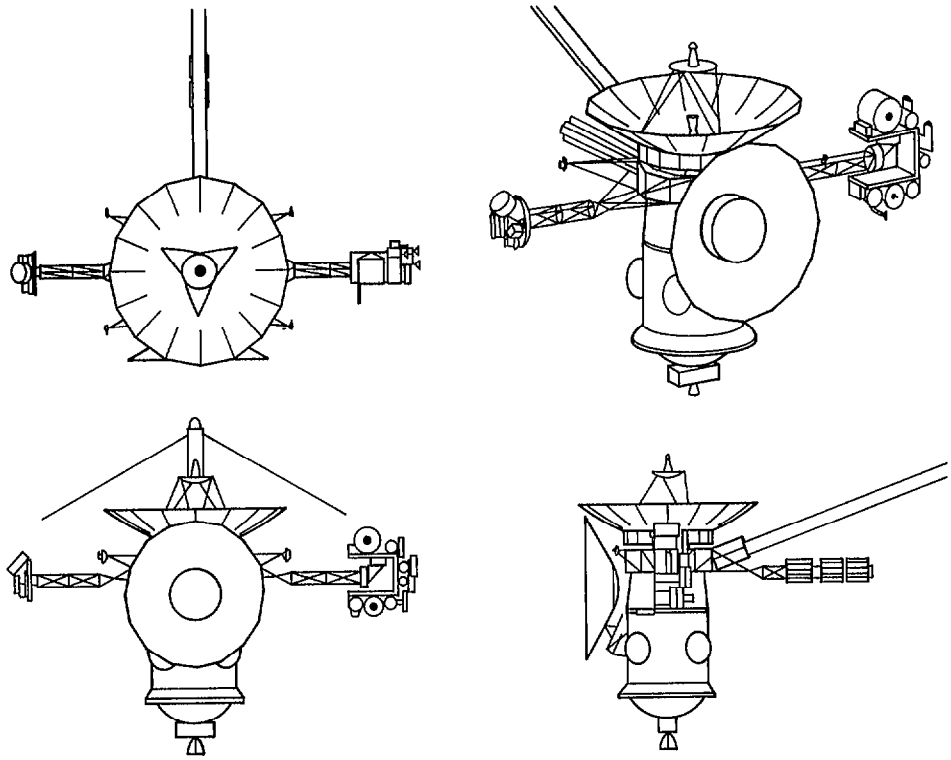

Fig. 1. Cassini spacecraft with 3.66 m HGA

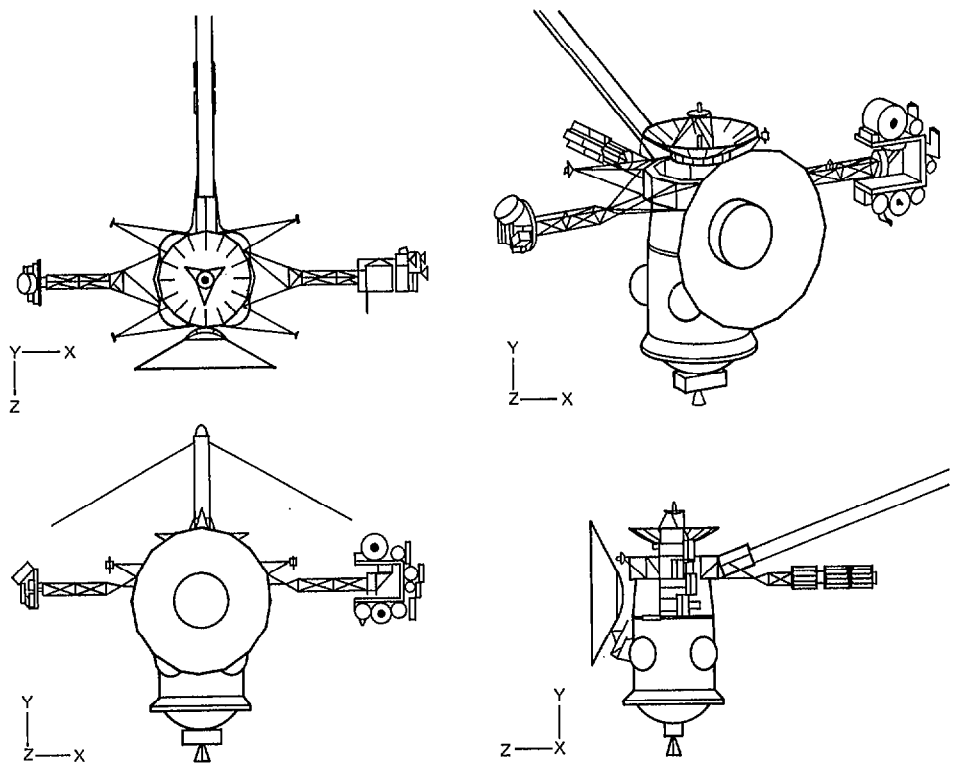

Fig. 2. Cassini spacecraft with 1.7 m HGA

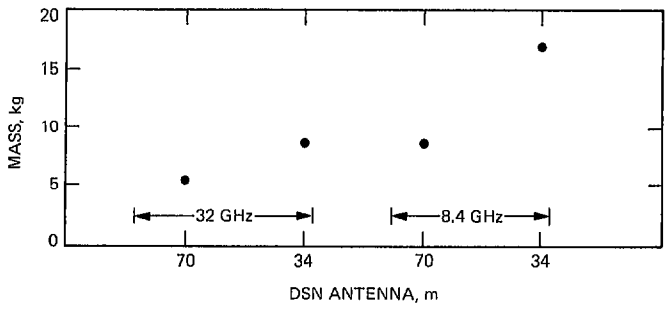

Fig. 3. Minimum mass of parabolic antenna with TWTA

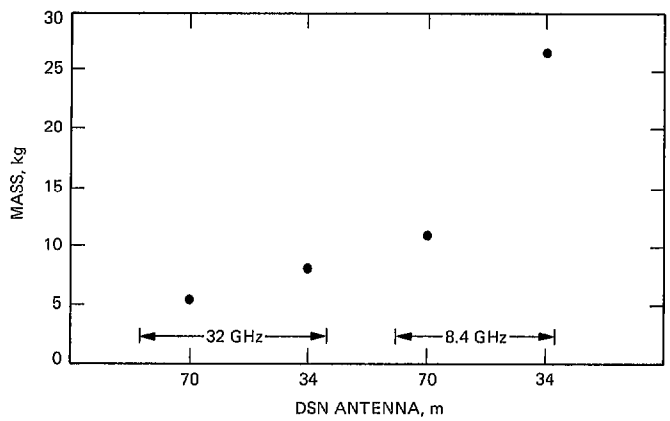

Fig. 4. Minimum mass of flat planar array

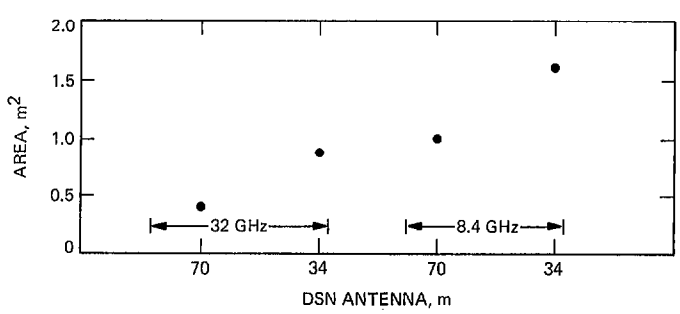

Fig. 5. Area of minimum mass configuration for parabolic antenna with TWTA

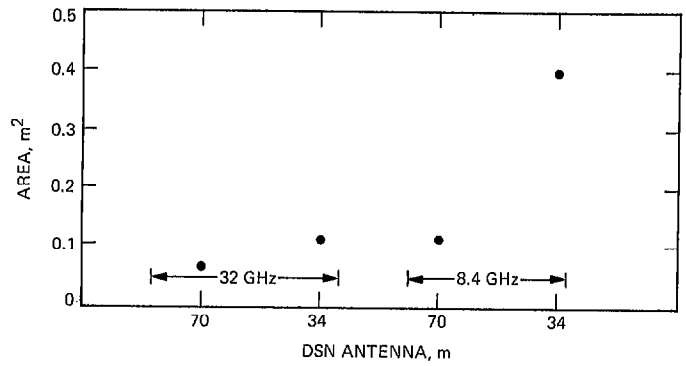

Fig. 6. Area of minimum mass configuration for flat plate array

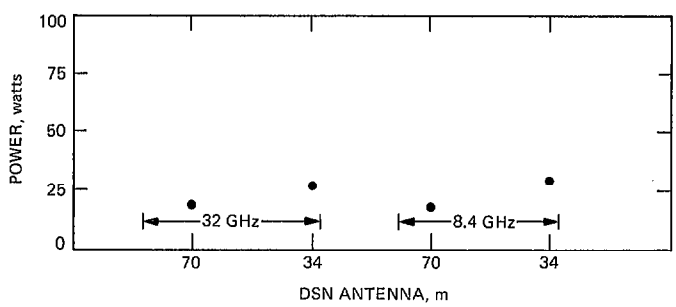

Fig. 7. DC power for minimum mass configuration for parabolic antenna with TWTA

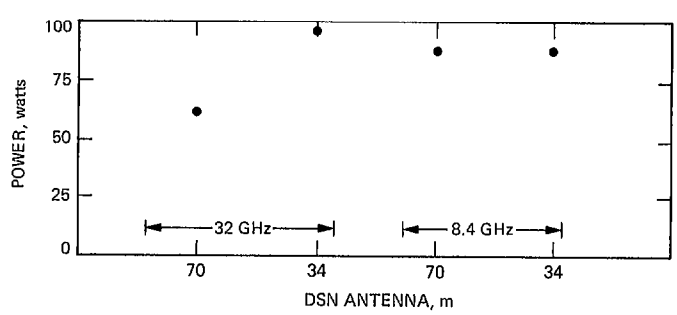

Fig. 8. DC power for minimum mass configuration for flat plate array

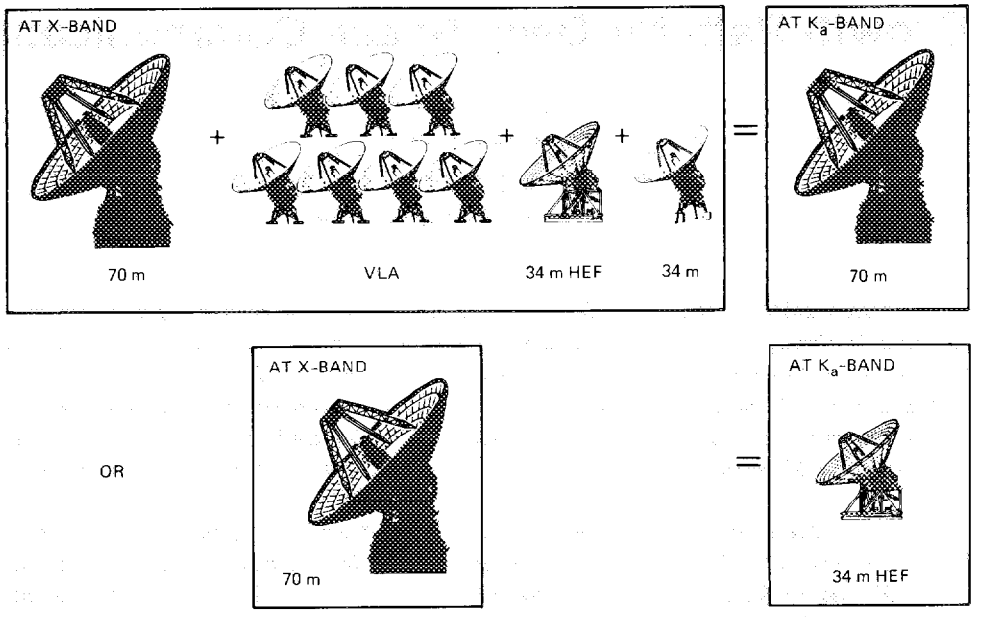

Fig. 9. The *G/T* equivalence for X-band and 32 GHz